ME 2165
RESERVE
STDN LIBRARY

4140

ME 2165
C.1

INSTRUCTION MANUAL

[redacted]

EMR TELEMETRY DIVISION
BOX 3041 • SARASOTA, FLORIDA

ERRATA

February 4, 1983

Technical Manual ME-2165

Programmable Tunable Discriminator Model 4140

Ref: Technical Manuals Change Request sheet, BFEC, dated 1-26-83.

1. Replace figure 5-26, page 5-56 with the attached.

2. Upon completion, place this errata in front of the manual for future reference.

c.1

TECHNICAL MANUAL

PROGRAMMABLE TUNABLE DISCRIMINATOR

MODEL 4140 (EMR)

May 1, 1968

MFOD
REFERENCE COPY
RETURN TO MFOD LIBRARY

Prepared For

NATIONAL AERONAUTICS AND SPACE ADMINISTRATION

Under Contract NAS5-10632

FOREWORD

This manual describes all versions of the EMR 4140 which are as follows: 4140-01, 4140-02, 4140-03, 4140-04, 4140-05, 4140-05-M5 and 4140-06. The unit purchased by NASA under Contract NAS5-10632 is the Model 4140-05-M5. Information pertinent to the Model 4140-05-M5 is integrated into the manual and treated the same as all other versions. This unit is referred to as the Model 4140-M5 in the body of the manual.

LIST OF EFFECTIVE PAGES

Total Number of pages is 179, as follows:

SECTION	PAGE NO.	ISSUE
	Title	Original
	A	Original
	B	Original
	i through vii	Original
1	1-1 through 1-8	Original
2	2-1 through 2-3	Original
3	3-1 through 3-18	Original
4	4-1 through 4-5	Original
	4-5A	Original
	4-6 through 4-18	Original
5	5-1 through 5-30	Original
	5-30A	Original
	5-31 through 5-33	Original
	5-33A	Original
	5-34 and 5-35	Original
	5-35A	Original
	5-36 and 5-37	Original
	5-37A	Original
	5-38 and 5-39	Original
	5-39A	Original
	5-40 through 5-43	Original
	5-43A	Original
	5-44 through 5-47	Original
	5-47A	Original
	5-48 through 5-57	Original
	5-57A	Original
	5-58 through 5-62	Original
6	6-1 through 6-7	Original
	6-7A	Original
	6-8 through 6-10	Original
	6-10A	Original
	6-11 through 6-13	Original
	6-13A	Original
	6-14 through 6-25	Original
	6-25A	Original
	6-26 through 6-39	Original
	6-39A	Original
	6-40 through 6-46	Original

TABLE OF CONTENTS

CTION		PAGE
	GENERAL DESCRIPTION	1-1
	1.1 Introduction	1-1
	1.2 Functional Description	1-2
	1.3 Physical Description	1-3
2	SPECIFICATIONS	2-1
	2.1 General	2-1
	2.2 Electrical Specifications	2-1
	2.3 Mechanical Specifications	2-3
3	INSTALLATION AND OPERATION	3-1
	3.1 Installation	3-1
	3.2 Operation	3-1
	3.2.1 Local Mode of Operation	3-1
	3.2.1.1 Initial Adjustments	3-1
	3.2.1.2 Operating Procedure	3-10
	3.2.2 Remote Mode of Operation	3-11
	3.2.3 Tape-Speed-Compensation (TSC) System	3-15
	3.2.4 Tape-Speed-Compensation (TSC) Gain and Delay Adjustment	3-16
4	THEORY OF OPERATION	4-1
	4.1 General	4-1
	4.2 General Theory of Operation	4-1
	4.3 Detailed Theory of Operation	4-4
	4.3.1 Bandpass Input Filter (BPIF)	4-4
	4.3.2 Limiter	4-6
	4.3.3 Subcarrier Amplitude Meter Circuit	4-6
	4.3.4 Zero-Signal Detector Circuit	4-6
	4.3.5 Trigger Circuit	4-7
	4.3.6 FM Detector	4-8
	4.3.7 Summing Multivibrator	4-9
	4.3.8 Voltage Switch	4-10
	4.3.9 Out-of-Range Detector	4-10
	4.3.10 Low-Pass Output Filter	4-11
	4.3.11 Output Circuits	4-13
	4.3.12 Balance Circuits	4-13
	4.3.13 Tape-Speed-Compensation Circuit (TSC)	4-14
	4.3.14 Power Supply and Regulator Circuits	4-14

TABLE OF CONTENTS (CONT'D.)

CTION PAGE

4.3.14.1 –20-Volt Regulator Circuit 4-15
4.3.14.2 – LIMIT Circuit 4-17

5 MAINTENANCE..... 5-1

5.1 General 5-1
5.2 Troubleshooting..... 5-1
5.2.1 Visual Inspection 5-1
5.2.2 Circuit Waveforms..... 5-2
5.2.3 Transistor Voltage Measurements 5-2
5.3 Checkout and Adjustment..... 5-2
5.3.1 Test Equipment Required 5-3
5.3.2 Regulator Circuits 5-3
5.3.3 Bandpass Input Filter 5-5
5.3.4 Limiter and Trigger Circuit 5-5
5.3.5 Subcarrier Amplitude Meter Circuit 5-6
5.3.6 Zero-Signal Detector 5-6
5.3.7 Detector Circuit 5-6
5.3.8 Voltage Switch Circuit 5-7
5.3.9 Out-of-Range Detector 5-7
5.3.10 Low-Pass Output Filter 5-8
5.3.11 Output Circuits 5-8
5.3.12 Tape-Speed-Compensation (TSC) Circuit ... 5-10
5.4 Wiring 5-10

6 PARTS LISTS..... 6-1

6.1 General 6-1

A APPENDIX

LIST OF ILLUSTRATIONS

GURE		PAGE
ontispiece	EMR Model 4140 Programmable Tunable Discriminator	vii
1-1	EMR Model 4140 Programmable Tunable Discriminator, Major Assemblies	1-5
1-2	Card-Tray Assembly A2, Printed-Circuit-Card Complement	1-6
3-1	Model 4140 Programmable Tunable Discriminator Rear Panel Configuration	3-2
3-2	Model 4140 Programmable Tunable Discriminator, Location of Front-Panel Controls, Indicators, and Monitor Jacks	3-4
3-3	Remote Control Connector A3J5 Pin-Location Diagram	3-11
3-4	Tape-Speed-Compensation System Block Diagram	3-15
3-5	TSC Gain Adjustment, Equipment Setup	3-17
3-6	VCO Calibration for TSC Delay Adjustment, Equipment Setup	3-18
3-7	TSC Delay Adjustment, Equipment Setup	3-18
4-1	Simplified Block Diagram, Model 4140 Programmable Tunable Discriminator	4-2
4-2	Detailed Block Diagram	4-5
4-2A	Model 4140-M5 ±40% Deviation Bypass	4-5A
4-3	Simplified Schematic Diagram, Subcarrier Amplitude Meter Circuit	4-7
4-4	Simplified Schematic Diagram, Zero-Signal Detector Circuit	4-8
4-5	Simplified Schematic Diagram, FM Detector Section 1	4-9
4-6	Voltage Switch Circuit, Simplified Schematic Diagram	4-11
4-7	Positive Out-of-Range Detector, Simplified Schematic Diagram	4-12
4-8	Power Supply and Regulator Circuits Simplified Schematic	4-16
4-9	-20-Volt Regulator Circuit Schematic Diagram	4-18
5-1	Model 4140 Programmable Tunable Discriminator, Assembly Diagram	5-31
5-2	Front-Panel Assembly A1 Location of Components	5-32
5-3	Front-Panel Assembly A1 Schematic Diagram	5-33
5-3A	Model 4140-M5 Front Panel Schematic Diagram	5-33A
5-4	BPIF No. 1 Printed-Circuit Card A2J1 Location of Components	5-34
5-5	BPIF No. 1 Printed-Circuit Card A2J1 Schematic Diagram	5-35
5-5A	BPIF No. 1 Printed-Circuit Card A2J1 Schematic Diagram for the 4140-M5	5-35A
5-6	Input Printed-Circuit Card A2J2 Location of Components	5-36
5-7	Input Printed-Circuit Card A2J2 Schematic Diagram	5-37
5-7A	Model 4140-M5 Input Card Schematic Diagram	5-37A
5-8	BPIF No. 2 Printed-Circuit Card A2J3 Location of Components	5-38
5-9	BPIF No. 2 Printed-Circuit Card A2J3 Schematic Diagram	5-39

LIST OF ILLUSTRATIONS (CONT'D.)

GURE		PAGE
5-9A	BPIF No. 2 Printed-Circuit Card A2J3 Schematic Diagram for the 4140-M5	5-39A
5-10	TSC Printed-Circuit Card A2J4 Location of Components	5-40
5-11	TSC Printed-Circuit Card A2J4, Schematic Diagram	5-41
5-12	Limiter Printed-Circuit Card A2J6 Location of Components	5-42
5-13	Limiter Printed-Circuit Card A2J6 Schematic Diagram	5-43
5-13A	Model 4140-M5 Limiter Card Schematic Diagram	5-43A
5-14	Detector Printed-Circuit Card A2J8 Location of Components	5-44
5-15	Detector Printed-Circuit Card A2J8 Schematic Diagram	5-45
5-16	Voltage Switch Printed-Circuit Card A2J10 Location of Components	5-46
5-17	Voltage Switch Printed-Circuit Card A2J10 Schematic Diagram	5-47
5-17A	Model 4140-M5 Voltage Switch Card Schematic Diagram	5-47A
5-18	LPOF Single-Pole Printed-Circuit Card A2J11 Location of Components	5-48
5-19	LPOF Single-Pole Printed-Circuit Card Schematic Diagram	5-49
5-20	LPOF Pole-Pair Printed-Circuit Card A2J12 Location of Components	5-50
5-21	LPOF Pole-Pair Printed-Circuit Card A2J12 Schematic Diagram	5-51
5-22	LPOF Pole-Pair Printed-Circuit Card A2J13 Location of Components	5-52
5-23	LPOF Pole-Pair Printed-Circuit Card A2J13 Schematic Diagram	5-53
5-24	LPOF Pole-Pair Printed-Circuit Card A2J14 Location of Components	5-54
5-25	LPOF Pole-Pair Printed-Circuit Card A2J14 Schematic Diagram	5-55
5-26	Output Printed-Circuit Card A2J15 Location of Components	5-56
5-27	Output Printed-Circuit Card A2J15 Schematic Diagram	5-57
5-27A	Model 4140-M5 Output Card Schematic Diagram	5-57A
5-28	Regulator Printed-Circuit Card A2J16 Location of Components	5-58
5-29	Regulator Printed-Circuit Card A2J16 Schematic Diagram	5-59
5-30	Power Supply Assembly A4	5-60
5-31	Component Mounting Board A4TB1, Location of Components	5-61
5-32	Power Supply Assembly A4, Schematic Diagram	5-62

LIST OF TABLES

E		PAGE
1	Card-Tray Assembly A2, Printed-Circuit-Card Description	1-7
1	Model 4140 Programmable Tunable Discriminator, Function of Rear-Panel Connectors	3-3
2	Model 4140 Programmable Tunable Discriminator, Function of Front-Panel Controls, Indicators, and Monitor Jacks	3-5
3	Remote Control Programming Instructions	3-12
1	Circuit Waveforms, Model 4140 Programmable Tunable Discriminator	5-11
-2	Transistor Voltages, BPIF No. 1 Printed-Circuit Card (A2J1)	5-15
-3	Transistor Voltages, Input Printed-Circuit Card (A2J2)	5-16
-4	Transistor Voltages, BPIF No. 2 Printed-Circuit Card (A2J3)	5-17
-5	Transistor Voltages, TSC Printed-Circuit Card (A2J4)	5-18
-6	Transistor Voltages, Limiter Printed-Circuit Card(A2J6)	5-19
-7	Transistor Voltages, Detector Printed-Circuit Card(A2J8)	5-20
-8	Transistor Voltages, Voltage Switch Printed-Circuit Card (A2J10)	5-21
-9	Transistor Voltages, LPOF Single-Pole Printed-Circuit Card (A2J11)	5-22
-10	Transistor Voltages, LPOF Pole-Pair Printed-Circuit Card (A2J12, J13, and J14)	5-23
-11	Transistor Voltages, Output Printed-Circuit Card (A2J15)	5-24
-12	Transistor Voltages, Regulator Printed-Circuit Card (A2J16)	5-25
-13	Connection List, Model 4140 Programmable Tunable Discriminator	5-26
-13A	Model 4140-M5 Wiring Modifications	5-30A
-1	Model 4140 Programmable Tunable Discriminator Assembly	6-2
-2	Front-Panel/Subpanel Assembly Parts List	6-3
-3	Card Tray Assembly Parts List	6-4
-4	Bandpass Input Filter No. 1 Printed Circuit Card Parts List	6-5
-4A	Model 4140-M5 Bandpass Input Filter Card No. 1 Modification Parts List	6-7A
-5	Input Printed-Circuit Card Parts List	6-8
-5A	Model 4140-M5 Input Card Modification Parts List	6-10A
-6	Bandpass Input Filter No. 2 Printed-Circuit Card Parts List	6-11
-6A	Model 4140-M5 Bandpass Input Filter No. 2 Card Modification Parts List	6-13A
-7	Tape-Speed-Compensation Printed-Circuit Card Parts List	6-14

LIST OF TABLES (CONT'D).

BLE		PAGE
6-8	Limiter Printed-Circuit Card Parts List	6-18
6-9	Detector Printed-Circuit Card Parts List	6-21
6-10	Voltage Switch Printed-Circuit Card Parts List	6-23
6-10A	Model 4140-M5 Voltage Switch Card Modification Parts List	6-25A
6-11	Low-Pass Output Filter Single-Pole Printed-Circuit Card Parts List	6-26
6-12	Low-Pass Output Filter Pole-Pair Printed-Circuit Card Parts List (Reference Figure 5-20)	6-29
6-13	Low-Pass Output Filter Pole-Pair Printed-Circuit Card Parts List (Reference Figure 5-22)	6-32
6-14	Low-Pass Output Filter Pole-Pair Printed-Circuit Card Parts List (Reference Figure 5-24)	6-35
6-15	Output Printed-Circuit Card Parts List	6-37
6-15A	Model 4140-M5 Output Card Modification Parts List	6-39A
6-16	Regulator Printed-Circuit Card Parts List	6-40
6-17	Rear-Panel Assembly Parts List	6-42
6-18	Power Supply Assembly Parts List	6-43
6-19	Approved Vendors List	6-44

EMR MODEL 4140 TUNABLE SUBCARRIER DISCRIMINATOR

SECTION 1

GENERAL DESCRIPTION

1.1 INTRODUCTION

This manual contains information for the operation and maintenance of the EMR Model 4140 Programmable Tunable Discriminator. The discriminator is a precision solid-state instrument intended for rack mounting in an FM data-processing or -checkout complex. The discriminator is designed to process analog or pulse-type intelligence data contained in an FM subcarrier channel. Operating FM subcarrier center frequencies, deviations, and data-cutoff frequencies are manually programmable at the front panel or remotely programmable from an external source.

An EMR Model 4141 Programmer is a companion unit available to remotely program the discriminator. The programmer is capable of selecting a total of 23 discriminator programs, each program selecting the operating parameters corresponding to an IRIG or special channel. When an EMR Model 4141 Programmer is purchased with the discriminator, a description of the programmer is provided in a separate instruction manual.

FM subcarrier center frequencies between 100 Hz and 1.5 MHz are selectable to four significant digits. Standard center-frequency deviations of ±7.5%, ±15%, ±30%, and ±40% are provided; however, other deviations between these limits are available on special request. The Model 4140-M5 contains deviations of ±7.5%, ±15%, ±20%, ±30%, and ±40%. Tunable output filters provide either constant-delay or constant-amplitude characteristics with data-cutoff frequencies between 1 Hz and 300 KHz.

The discriminator is available in any of six standard design-sequence variations and one special design sequence. These are described as follows:

a. Model 4140-01--Standard unit containing a three-pole low-pass output filter for a rolloff of 18 Db/octave beyond selected cutoff frequency. Tape-speed compensation (TSC) is not included.

b. Model 4140-02--Same as Model 4140-01, except TSC is included.

c. Model 4140-03--Standard unit containing a five-pole low-pass output filter for a rolloff of 30 Db/octave beyond selected cutoff frequency. TSC is not included.

d. Model 4140-04--Same as Model 4140-03, except TSC is included.

e. Model 4140-05 and 4140-05-M5--Standard unit containing a seven-pole low-pass output filter for a rolloff of 42 Db/ octave beyond selected cutoff frequency. TSC is not included.

f. Model 4140-06--Same as Model 4140-05 except TSC is included.

.2 FUNCTIONAL DESCRIPTION

he discriminator extracts a subcarrier channel from an FM multiplex (except e ±40% deviation on the 4140-M5) and detects the intelligence data contained in at channel. This intelligence data is presented at the discriminator output in e form of varying analog voltages. The ±40% deviation on the 4140-M5 is for single channel input application.

tunable bandpass input filter (BPIF) at the discriminator input (in all units xcept the ±40% deviation position on the 4140-M5) extracts the desired subarrier frequency from the input FM multiplex, all other subcarrier frequencies re attenuated. The single-channel BPIF output is amplitude limited and pulse haped by a three-stage high-gain limiter circuit and trigger circuit.

he FM detector is a dual-channel circuit employing full-wave pulse-averaging M detection for determining the amount and direction of the subcarrier modulation. This modulation results in a change in the duty cycle of the detector quare-wave outputs. The dual-channel detector outputs are summed by a high-peed bistable multivibrator producing a square-wave output with a duty cycle roportional to the subcarrier modulation. A voltage switch at the summing-ircuit output produces a similar square-wave output but with precise positive nd negative excursions to eliminate erroneous data contained in an amplitude-odulated signal.

he modulation component is filtered by a tunable three-, five-, or seven-pole ow-pass output filter with a selectable constant-delay or constant-amplitude haracteristic. An output amplifier at the discriminator output provides drive apability for the signal output to recording or readout devices.

he discriminator is operated in a local mode or remote mode. In the local ode, front-panel controls select all operating parameters for the subcarrier hannels. These controls include center-frequency selection, deviation selecon, discriminator balance, data-cutoff frequency, output-filter response, and andedge-voltage selection. In the remote mode, the operating parameters for ubcarrier channels are selected by an external source such as computer, reote control panel, or an EMR Model 4141 Programmer.

n internal power supply operates from a primary power input to generate all oltages for discriminator operation.

1.3 PHYSICAL DESCRIPTION

The EMR Model 4140 Programmable Tunable Discriminator is a self-contained unit, 20-1/4 inches in overall depth, designed for mounting in a standard 19-inch equipment rack. The discriminator is 5-1/4 inches high and 19 inches wide, including the mounting slides. Tilting or nontilting side-mounting slides are provided for mounting the discriminator in the equipment rack.

The discriminator consists of four major assemblies as shown in Figure 1-1. These assemblies are identified by assembly designations A1 through A4 as follows:

A1--Front panel/subpanel

A2--Card tray

A3--Rear panel

A4--Power supply

The front panel/subpanel, A1, is a two-segment assembly in which all operating controls, indicators, and monitor jacks are mounted directly to the subpanel and extend through precut openings in the front panel. Also, the front panel/-subpanel contains turn-to-lock catches used to secure the discriminator in the mounting rack.

The card-tray assembly, A2, mounts all plug-in printed-circuit cards in the discriminator chassis. Access to this assembly is obtained by releasing the quick-disconnect fasteners in the top cover of the discriminator and removing the cover. Cam-operated ejectors on both ends of the printed-circuit cards facilitate their removal from the card-tray locations. Provisions for up to 14 printed-circuit cards are provided; however, the number of cards will vary depending on the particular discriminator configuration. The maximum card-tray printed-circuit-card complement is shown in Figure 1-2 and described in Table 1-1. All wiring to the printed-circuit cards in the card tray is terminated at a 32-pin card mating receptacle in the bottom of each card location.

The rear-panel assembly, A3, contains electrical connectors for all input and output connections to the discriminator. A twist-lock power plug is provided for AC power input to the discriminator power supply. A rear-panel five-ampere fuse, connected in series with the AC power input, provides protection from the AC power source. Internal cooling is provided by a blower mounted vertically on the inside of the rear panel. The blower draws cooling air in through a screen on the opposite side of the rear panel and discharges the air through the blower opening.

The power-supply assembly, A4, provides all DC voltages necessary for discriminator operation. The power supply is located adjacent to the card-tray

ssembly in the middle section of the discriminator. Access to the power supply is gained by releasing the quick-disconnect fasteners in the discriminator op cover and removing the top cover. AC power wiring to the power supply is outed from the twist-lock power plug on the rear panel through a rear-panel use and front-panel power switch to the power-supply power components.

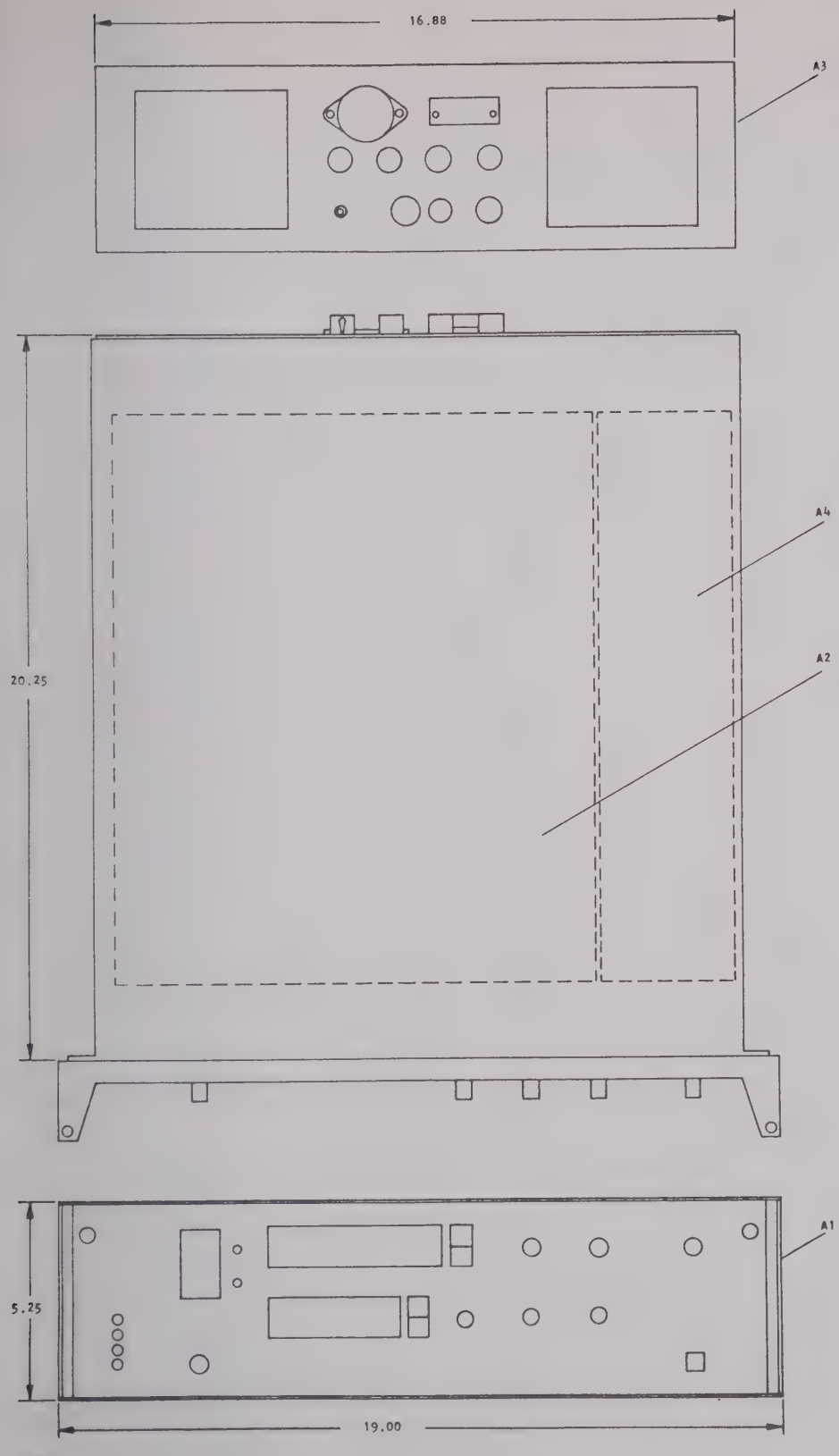

Figure 1-1. EMR Model 4140 Programmable Tunable Discriminator, Major Assemblies

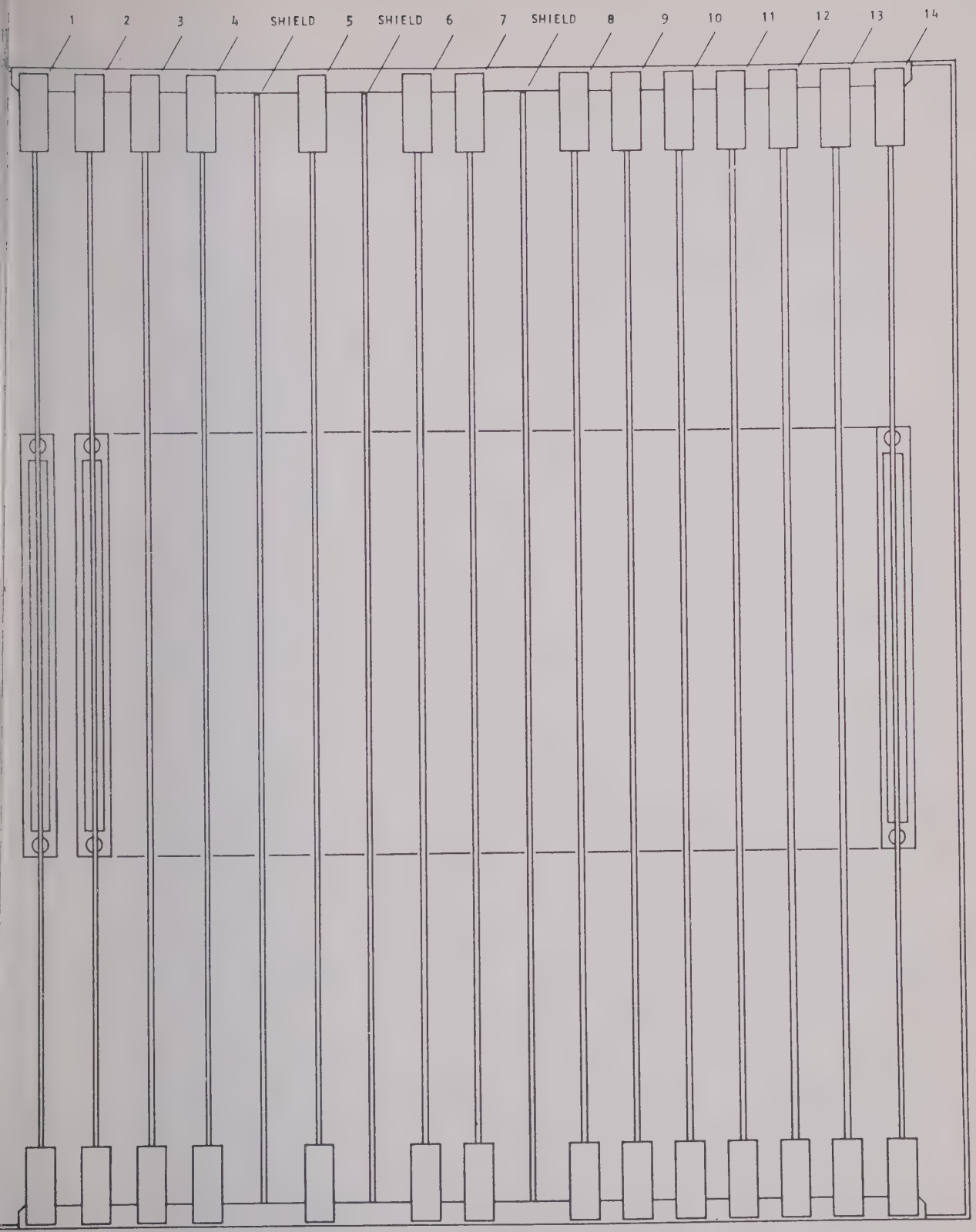

TE:
. EMR Drawing Control No. 4140-002.

Figure 1-2. Card-Tray Assembly A2,
Printed-Circuit Card Complement

Table 1-1. Card-Tray Assembly A2, Printed-Circuit-Card Description

F. O.	NAME	DESIG-NATION	TYPE	FUNCTION
1	BPIF No. 1 Printed-Circuit Card	A2J1	6463***	Contains components for the first section of the tunable bandpass input filter.
2	Input Printed-Circuit Card	A2J2	6472***	Contains components for the input-amplifier circuit, isolation amplifiers, and subcarrier amplitude meter circuit.
3	BPIF No. 2 Printed-Circuit Card	A2J3	6466***	Contains components for the second section of the tunable bandpass input filter circuit.
4	TSC* Printed-Circuit Card	A2J4	6469	Contains components for the tape-speed-compensation circuit and detector balance circuit.
5	Limiter* Printed-Circuit Card	A2J6	6445***	Contains components for the limiter circuit, trigger circuit, and zero-signal circuit.
6	Detector* Printed-Circuit Card	A2J8	6448	Contains components for the dual-channel pulse-averaging FM detector circuit.
7	Voltage Switch Printed-Circuit Card	A2J10	6451***	Contains components for the summing multivibrator circuit, the voltage switch circuit, and the out-of-range detector circuit.
8	LPOF Single-Pole Printed-Circuit Card	A2J11	6457	Contains components for the tunable single-pole low-pass output-filter circuit.
9	LPOF Pole-Pair Printed-Circuit Card	A2J12	7525	Contains components for the tunable pole-pair low-pass output filter circuit.
10	LPOF** Pole-Pair Printed-Circuit Card	A2J13	7526	Contains components for the tunable pole-pair low-pass output filter circuit.
11	LPOF** Pole-Pair Printed-Circuit Card	A2J14	7527	Contains components for the tunable pole-pair low-pass output filter circuit.

le 1-1 (Cont'd.). Card-Tray Assembly A2, Printed-Circuit-Card Description

CF. O.	NAME	DESIG-NATION	TYPE	FUNCTION
2	Output Printed-Circuit Card	A2J15	6460***	Contains components for the output amplifier circuit.
3	Regulator Printed-Circuit Card	A2J16	6475	Contains components for the power supply regulator circuits.
4	Extender**** Printed-Circuit Card	A2J17	7753	

NOTES:

* These cards are factory matched sets and must be used together. Do not replace or exchange any of these cards without including the entire set. If factory repairs are necessary, return all three cards.

** These cards are used in particular discriminator configurations as follows:

A2J13--Models 4140-03, 4140-04, 4140-05, and 4140-06 only.
A2J14--Models 4140-05 and 4140-06 only.

***These cards contain an M5 suffix to the card type for the Model 4140-M5.

****Extender card is optional.

SECTION 2

SPECIFICATIONS

1 GENERAL

is section contains the electrical and mechanical specifications for the EMR del 4140 Programmable Tunable Discriminator.

2 ELECTRICAL SPECIFICATIONS

a. Subcarrier Center Frequencies: Center frequencies between 100 Hz and 1.5 MHz are selectable up to four significant digits by front-panel digit switches and range switch.

b. Deviations: Deviations of ±7.5%, ±15%, ±30%, and ±40% are standard. These are selectable by front-panel switching. The Model 4140-M5 has ±7.5%, ±15%, ±20%, ±30%, and ±40%.

c. Data-Cutoff Frequencies: Cutoff frequencies between 1 Hz and 300 KHz are selectable to three significant digits by front-panel digit switches and range switch.

d. Input Impedance: Greater than 100K ohms resistive shunted by less than 30 Pf capacitance.

e. Dynamic Input Signal Range: 10 millivolts to 5 volts RMS for subcarrier center frequencies up to 300 KHz. Minimum input signal increases linearly to 50 millivolts RMS for frequencies from 300 KHz to 1.5 MHz. All measurements are made with respect to the output of the bandpass input filter.

f. Rejection of Unwanted Signals: Full-scale modulation of an adjacent ±7.5% deviation IRIG channel causes an RMS error of less than 0.1% of bandwidth even when interfering signal is of an amplitude equal to the desired subcarrier input signal.

g. Amplitude Modulation Rejection: With a deviation ratio of 5, a 20-Db step of input amplitude anywhere in the dynamic input range causes a peak transient of less than 1% of bandwidth.

h. Static Linearity: A center frequencies of up to 1 MHz, ±0.1% of bandwidth, best straight line, for deviations of ±7.5% and ±15%; and ±0.2% of bandwidth, best straight line, for deviations greater than ±15%. At center frequencies of 1 MHz or more, ±1% of bandwidth, best straight line, for all deviations.

i. Output Voltage: Single ended and referenced to ground. The deviation sense is selectable by rear-panel switching. Front-panel control provides means for varying output voltage at bandedge from 0 to ±10 volts. Output voltage is limited to approximately ±13 volts. The 4140-M5 output voltage is offset to +5 volts with a center frequency input. The bandedge voltages are adjustable up to a maximum swing from 0-volt to +10 volts.

j. Output Current: 200 milliamperes from DC to 50 KHz; 100 milliamperes from 50 KHz to 100 KHz; 50 milliamperes above 100 KHz. Output current is limited to ±225 milliamperes.

k. RMS Output Noise: For deviation ratios of 5 or greater, the output noise will be less than 0.1% of bandwidth at center frequencies up to 300 KHz; less than 0.2% of bandwidth above 300 KHz.

l. Output Zero Stability: ±0.15% of full bandwidth in a 15-hour period at a constant temperature after a 30-minute warm-up.

m. Output Impedance: Less than 2 ohms to 10 KHz; increasing linearly to a maximum of less than 10 ohms at 300 KHz.

n. Output Loading: Maximum allowable capacitive load is 0.01 μf directly at the output connector. If the output current capability is not exceeded, the discriminator will operate with any load capacitance connected in series with a resistance of 10 ohms or more. The discriminator cannot be damaged by an output short circuit.

o. Harmonic Distortion: For deviation ratios of 5 or more and with bandedge-to-bandedge modulation, harmonic distortion of an IRIG channel is less than 1% for any modulation frequency up to channel cutoff frequency.

p. Data Response: The cutoff frequency of the low-pass output filter can be tuned from 1 Hz to 300 KHz. The response characteristic is switch selectable to be either constant-amplitude (Butterworth) or constant delay (Bessel). Three-, five-, and seven-pole configurations, having asymptotic roll-off beyond cutoff of −18, −30, and −42 Db per octave, respectively, are available. The response characteristics at cutoff are nominally −0.5 ±0.3 Db for constant-amplitude response and −3.0 ±1.0 Db for constant-delay response when operating at a deviation ratio of 2 or higher. The use of a seven-pole filter at deviations above ±15% and deviation ratios below 5 is recommended.

q. Power Requirement: 108 to 132 volts, 47 to 63 Hz, single-phase (80 watts at 120 volts).

r. Line Voltage Sensitivity: A 10-volt step of line voltage anywhere between 108 and 132 volts causes a peak transient of less than 0.2% of bandwidth at the discriminator output.

s. Temperature Range: Operation, +10°C to +50°C circulating air. Storage −55°C to +85°C

t. Tape-Speed Compensation: For any IRIG subcarrier the wow-and-flutter improvement is 26 Db for tape-speed variations as large as ±3% up to channel cutoff frequency at a deviation ratio of 5. An internal delay network is automatically controlled by the center frequency setting to provide the proper delay.

MECHANICAL SPECIFICATIONS

a. Panel Size: 5-1/4 inches (13.3 Cm) high by 19 inches (48.2 Cm) wide, including slides.

b. Overall Depth: 20-1/4 inches (51.4 Cm), excluding projections from front panel.

c. Weight: Net, 50 pounds (22.7 Kg). Shipping, 60 pounds (27.2 Kg).

SECTION 3

INSTALLATION AND OPERATION

.1 INSTALLATION

The EMR Model 4140 Programmable Tunable Discriminator is shipped completely assembled and ready for mounting. Any shortage or damage to the unit should be reported in accordance with the instructions of the EMR Purchase Order Acknowledgment (POA).

The discriminator is normally equipped with telescopic mounting slides for direct installation in a standard 19-inch equipment rack. After unpacking the unit, remove the mounting slides from the discriminator and mount the slides to the internal frame of the rack. Mounting hardware for this installation is supplied with each discriminator. Insert the discriminator into the slides until the unit is firmly seated. Turn-to-lock fasteners located on either side of the discriminator front panel secure the unit in the rack.

The discriminator may be extended from the rack for servicing by loosening the front-panel turn-to-lock fasteners and pulling the unit straight out. Pushbutton stop-latches are located on the outside surfaces of both slides holding the unit at the maximum extension. At this point, the discriminator may be removed from the rack by depressing the pushbutton stop-latches and pulling the unit straight out.

The external electrical connections to the discriminator are terminated at connectors on the rear panel. These connectors and other rear-panel components are illustrated in Figure 3-1 and described in Table 3-1.

.2 OPERATION

.2.1 Local Mode of Operation

In the local mode of operation, the discriminator operating parameters are selected by front- and rear-panel controls. After selecting the operating parameters and energizing the unit, the discriminator performance may be monitored through the use of front-panel indicators and monitor jacks. Each of the operating controls, indicators, and monitor jacks is shown in Figure 3-2 and described functionally in Table 3-2.

.2.1.1 Initial Adjustments

Prior to operating the discriminator, a balance and bandedge voltage adjustment should be made. The balance adjustment assures that the discriminator data output will be at a 0-volt level when the selected subcarrier signal input is

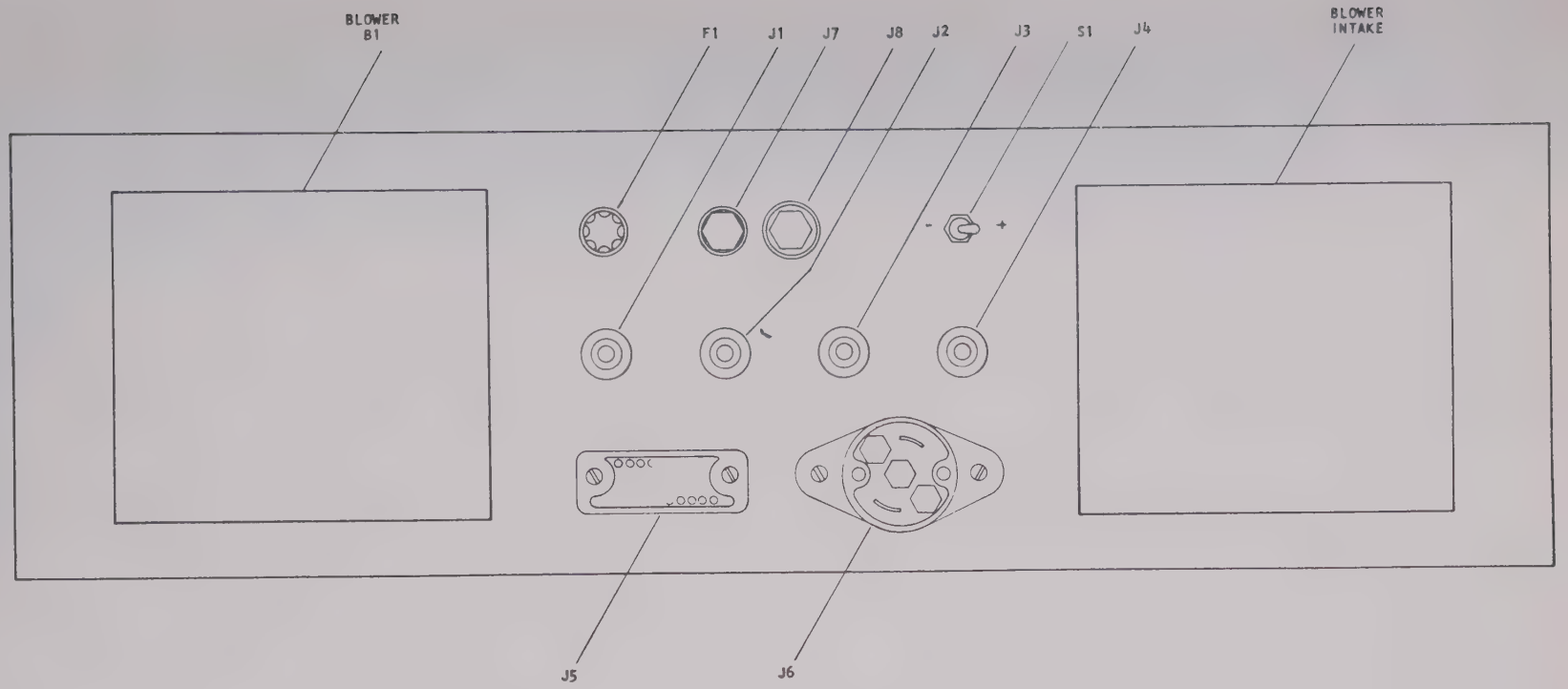

NOTE:

1. EMR DWG. CONT. NO. 4140-003.

Figure 3-1. Model 4140 Programmable Tunable Discriminator, Rear-Panel Configuration

Table 3-1. Model 4140 Programmable Tunable Discriminator, Function of Rear-Panel Connectors (Ref. Figure 3-1)

SIG.	NAME	TYPE	FUNCTION
A3J1	OUTPUT	BNC	Discriminator data output.
A3J2	TSC	BNC	Tape-speed-compensation input. (Used on Models 4140-02, 4140-04, and 4140-06 only).
A3J3	INPUT	BNC	FM subcarrier multiplex input.
A3J4	---	---	Not used.
A3J5	REMOTE Control	Amphenol	Used for remotely programming discriminator operating parameters. For pin-function listing and remote-programming instructions, refer to paragraph 3.2.2.
A3J6	POWER Plug	Hubbell Twist-lock	AC power input connection to discriminator power supply.
A3J7	CASE GND	Binding Post	Chassis ground.
A3J8	SIG GND	Binding Post	Signal ground.

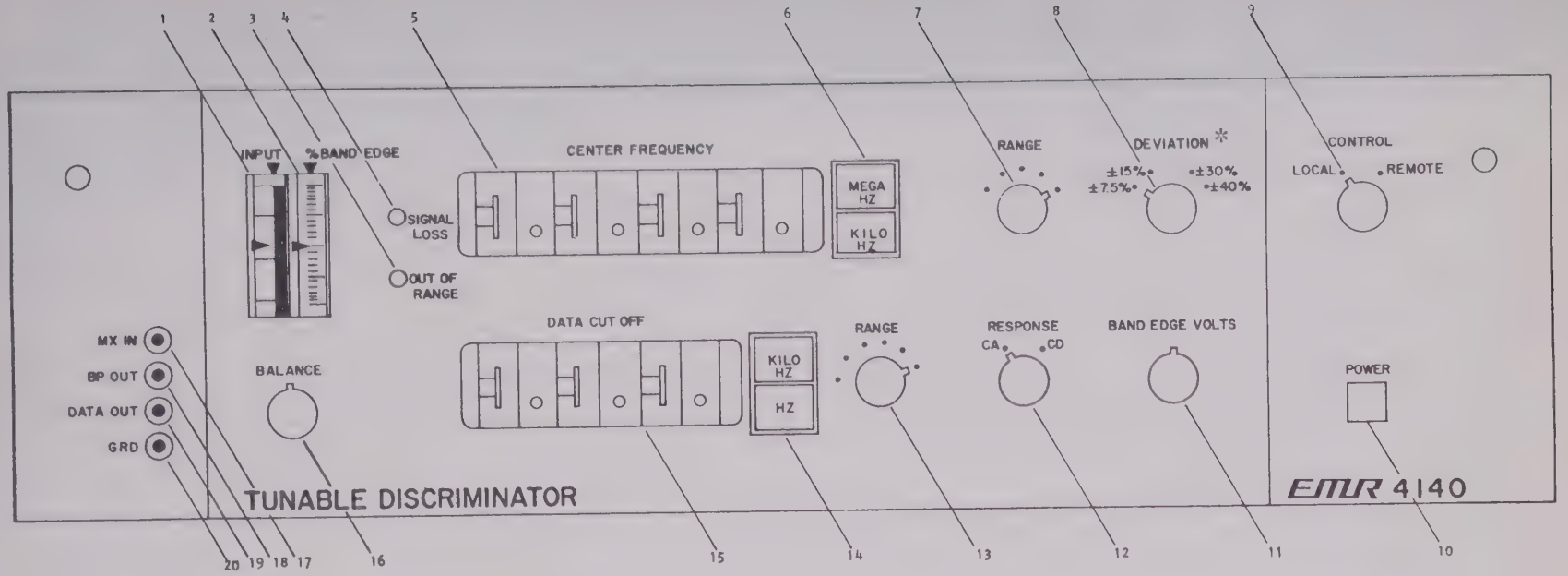

NOTE:

1. EMR DWG. CONT. NO. 4140-004.

*Deviations for the 4140-M5 are as follows:

±7.5%
±15%
±20%
±30%
±40%

Figure 3-2. Model 4140 Programmable Tunable Discriminator, Location of Front-Panel Controls, Indicators, and Monitor Jacks

Table 3-2. Model 4140 Programmable Tunable Discriminator, Function of Front-Panel Controls, Indicators, and Monitor Jacks (Ref. Figure 3-2)

F. D.	NAME	DESIG-NATION	FUNCTION
	INPUT Meter	M2	Displays the amplitude of the incoming subcarrier signal to the discriminator. Use of a nonlinear meter scale eliminates range switching.
	% BAND EDGE Meter	M1	Displays subcarrier signal deviation in percentage from bandcenter to either bandedge (U or L).
	OUT OF RANGE Indicator	DS12	Illuminates when the incoming subcarrier frequency is sufficiently above or below the prescribed bandedge for the selected center frequency.
	SIGNAL LOSS Indicator	DS11	Illuminates when the incoming subcarrier signal amplitude is less than a predetermined level. Signal loss level is adjustable up to 250 millivolts RMS but is normally adjusted to 10 millivolts RMS. When a signal loss condition exists, the discriminator output is clamped at a 0-volt level to protect output recording devices.
	CENTER FREQUENCY Select switches and decimal point indicators	S4, 5, 6, and 7. DS3, 4, 5, and 6 (reading from right to left)	The CENTER FREQUENCY select switches select the significant digits of the center frequency. The decimal point and multiplier are affixed by the position of the RANGE switch, S3. (S7, MSD switch, is used for frequencies of 1 MHz or greater.)
	MEGA HZ/KILO HZ Indicator	DS1	Indicates the multiplier for the setting of the CENTER FREQUENCY select switches and decimal point indicators.

ble 3-2 (Cont'd.). Model 4140 Programmable Tunable Discriminator, Function of Front-Panel Controls, Indicators, and Monitor Jacks

F. D.	NAME	DESIG-NATION	FUNCTION
	RANGE Switch	S3	Used in conjunction with the CENTER FREQUENCY select switches to select the discriminator operating center frequency range. This switch controls positioning of the decimal point and illumination of the MEGA HZ/KILO HZ indicator. The five switch positions are used as follows: a. Use position 1 for center frequencies between 100 Hz and 999 Hz. b. Use position 2 for center frequencies between 1 KHz and 9.99 KHz. c. Use position 3 for center frequencies between 10 KHz and 99.9 KHz. d. Use position 4 for center frequencies between 100 KHz and 999 KHz. e. Use position 5 for center frequencies between 1 MHz and 1.5 MHz.
	DEVIATION Switch	S2	Used to select the bandwidth (except the ±40% deviation of the 4140-M5) of the bandpass input filter and adjust the deviation sensitivity of the discriminator.
	CONTROL Switch	S1	Used to select either local or remote programming. In LOCAL position, all discriminator operating parameters are selected by front panel controls. In REMOTE position, the operating parameters are selected by applying external input signals to control lines at the rear-panel remote connector J5.

ble 3-2 (Cont'd.). Model 4140 Programmable Tunable Discriminator, Function of Front-Panel Controls, Indicators, and Monitor Jacks

F. D.	NAME	DESIG-NATION	FUNCTION
	POWER Switch	S13	Used to apply primary AC power to discriminator power supply.
	BAND EDGE VOLTS Control	R1	Used to adjust the maximum output voltage corresponding to a bandedge of the FM subcarrier channel.
	RESPONSE Switch	S8	Used to select the response characteristics of the discriminator output filter. The CA (Constant Amplitude) position is recommended for analog data outputs and CD (Constant Delay) position is recommended for pulse-type data outputs.
	RANGE Switch	S9	Used in conjunction with the DATA CUT OFF select switches to select the discriminator output filter data-cutoff frequency range. This switch controls positioning of the decimal point and illumination of the KILO HZ/HZ indicator. The switch positions are used as follows: Use position 1 for data cutoff frequencies between 1 Hz and 9.99 Hz. Use position 2 for data cutoff frequencies between 10 Hz and 99.9 Hz. Use position 3 for data cutoff frequencies between 100 Hz and 999 Hz. Use position 4 for data cutoff frequencies between 1 KHz and 9.99 KHz.

Table 3-2 (Cont'd.). Model 4140 Programmable Tunable Discriminator, Function of Front-Panel Controls, Indicators, and Monitor Jacks

EF. NO.	NAME	DESIG-NATION	FUNCTION
3 (ont'd.)			Use position 5 for data cutoff frequencies between 10 KHz and 99.9 KHz. Use position 6 for data cutoff frequencies between 100 KHz and 300 KHz.
4	KILO HZ/HZ Indicator	DS7	Indicates the multiplier for the setting of the DATA CUT OFF select switches and decimal point indicators.
5	DATA CUT OFF Select switches and decimal point indicators	S10, 11, and 12. DS8, 9, and 10. (Reading from right to left)	The DATA CUT OFF select switches select the significant digits of the cutoff frequency. The decimal point and multiplier are affixed by the position of the RANGE switch S9.
6	BALANCE Control	R2	Used to adjust the discriminator data output at a 0-volt level with a center-frequency input.
7	MX IN Test Jack	TP4	Test point to monitor the FM subcarrier multiplex input to the discriminator.
8	BP OUT	TP3	Test point to monitor the selected subcarrier channel output of the bandpass input filter.
9	DATA OUT	TP2	Test point to monitor the discriminator data output.
0	GND	TP1	Test point connected to discriminator ground.

ting at center frequency or ±5-volts for the 4140-M5. Once the discrimi- is balanced for a particular subcarrier channel, no further adjustment is ssary until another subcarrier channel is selected. The bandedge voltage tment need be made only once and will not change with selection of another rrier channel or selection of another deviation-sensitivity setting. The ce and bandedge voltage adjustments are accomplished as follows:

NOTE

In discriminators containing the Tape-Speed-Compensation (TSC) function, a shorting cap is attached to the rear panel. When performing the initial adjustments, install the shorting cap on the TSC input jack A3J2.

a. Using an external signal source (VCO or signal generator), apply an unmodulated center-frequency input to the discriminator at the rear-panel INPUT jack J3.

b. Depress the front-panel POWER pushbutton.

c. Position the front-panel CONTROL switch S1 to LOCAL.

d. Position the front-panel CENTER FREQUENCY thumbwheel switches (S4, S5, S6, and S7) to the significant digits of the selected center frequency. (Use S7, MSD switch, for frequencies of 1 MHz or greater.)

e. Rotate the front-panel RANGE switch S3 to affix the decimal point and illuminate the appropriate multiplier indicator.

f. Monitor the front-panel DATA OUT jack TP2 with a DC voltmeter and rotate the BALANCE control R2 for a 0-volt indication or +5-volts for the 4140-M5. Also, observe the front-panel % BANDEDGE meter M1 for a zero indication.

g. Position the front-panel DEVIATION switch S2 to the required position.

h. Deviate the external signal source to a frequency corresponding to a bandedge of the selected subcarrier channel.

i. Monitor the front-panel DATA OUT jack TP2 with a DC voltmeter and rotate the BANDEDGE VOLTS control R1 for the desired bandedge voltage indication. The bandedge voltage will remain constant throughout the entire deviation sensitivity range.

.2 Operating Procedure

ollowing procedure is to be used as a guide for the setup and operation of iscriminator:

NOTE

In discriminators containing the Tape-Speed-Compensation (TSC) function, a shorting cap is attached to the rear panel. When not using TSC, install the shorting cap on the TSC input jack A3J2.

a. Connect the FM subcarrier multiplex input to the discriminator rear-panel INPUT jack J3. The ±40% deviation for the 4140-M5 is a single-channel input only.

b. Position the rear-panel SENS switch S1 to negative (−) or positive (+) as required. In the (−) position, an increase in signal-input frequency will result in a decrease in discriminator output voltage. In the (+) position, an increase in signal-input frequency will result in an increase in discriminator output voltage.

c. Depress the front-panel POWER pushbutton.

d. Position the front-panel CONTROL switch S1 to LOCAL.

e. Position the front-panel DEVIATION switch S2 to the required position.

f. Position the front-panel CENTER FREQUENCY thumbwheel switches to the significant digits of the selected center frequency.

g. Rotate the front-panel RANGE switch S3 to affix the decimal point and illuminate the appropriate multiplier indicator.

h. Position the front-panel DATA CUTOFF thumbwheel switches to the significant digits of the selected data-cutoff frequency.

i. Rotate the front-panel RANGE switch S9 to affix the decimal point and illuminate the appropriate multiplier indicator.

j. Position the front-panel RESPONSE switch S8 to CA or CD as required. (The CA position is recommended for analog-type data outputs and the CD position is recommended for pulse-type data outputs.)

k. Observe the front-panel INPUT meter M2 for an input level within the discriminator specifications. (Refer to paragraph 2.2, step e.)

l. Observe that the front-panel SIGNAL LOSS and OUT OF RANGE indicators are extinguished.

2 Remote Mode of Operation

ıe remote mode of operation, the discriminator operating parameters are cted by applying external input signals to control lines at the rear-panel ote connector A3J5. These input signals are in the form of ground level olt) inputs at the appropriate pins to select each operating point.

blace the discriminator under remote control, position the front-panel NTROL switch, S1, to REMOTE. This disables all local controls except POWER pushbutton switch and the BANDEDGE VOLTS control. The band-e voltage is adjusted while under local control, and when switching to re-te control, this setting will remain constant throughout the entire operating ge of the discriminator.

NOTE

When switching to the remote mode of operation, rotate the front-panel BALANCE control fully counter-clockwise. This enables proper operation of the external balance function.

operating points and program instructions are contained in Table 3-3. The r-panel remote connector and pin-location diagram is shown in Figure 3-3.

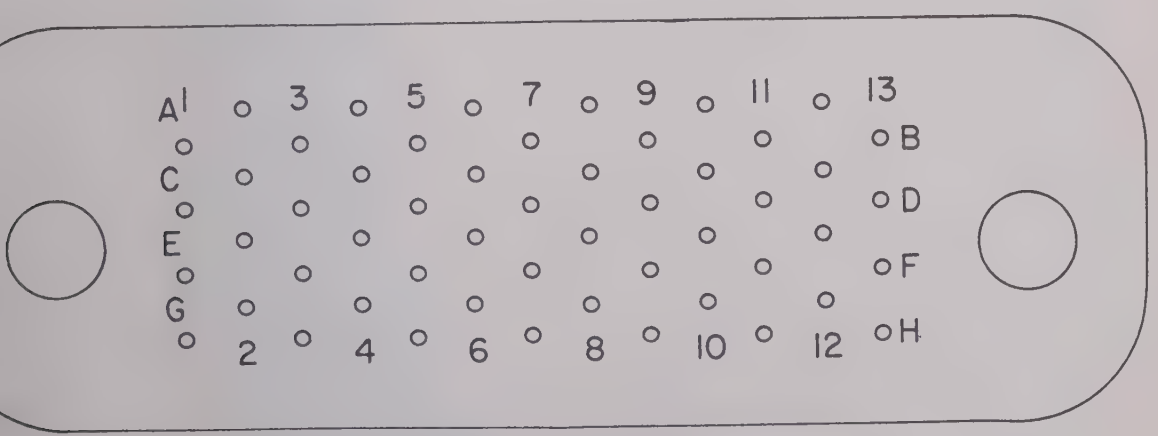

Figure 3-3. Remote Control Connector A3J5, Pin-Location Diagram

Table 3-3. Remote Control Programming Instructions
(Ref. Figure 3-3)

OPERATING PARAMETERS TO BE SELECTED		PROGRAM INSTRUCTION (AT REAR PANEL REMOTE CONNECTOR J5)
NAME	TYPE	
nter Frequency gits	MSD (Most Significant Digit)	
	1	Ground Pin F-13
	MSD-1	
	1	Ground Pin B-7
	2	Ground Pin A-8
	3	Ground Pins B-7 and A-8
	4	Ground Pin B-5
	5	Ground Pins B-5 and B-7
	6	Ground Pins B-5 and A-8
	7	Ground Pins B-5, A-8, and B-7
	8	Ground Pin A-6
	9	Ground Pins A-6 and B-7
	MSD-2	
	1	Ground Pin B-11
	2	Ground Pin A-12
	3	Ground Pins B-11 and A-12
	4	Ground Pin B-9
	5	Ground Pins B-9 and B-11
	6	Ground Pins B-9 and A-12
	7	Ground Pins B-9, A-12, and B-11
	8	Ground Pin A-10
	9	Ground Pins A-10 and B-11
	MSD-3	
	1	Ground Pin D-1
	2	Ground Pin C-2
	3	Ground Pins C-2 and D-1
	4	Ground Pin B-13
	5	Ground Pins B-13 and D-1
	6	Ground Pins B-13 and C-2
	7	Ground Pins B-13, C-2 and D-1
	8	Ground Pin D-13
	9	Ground Pins D-13 and D-1

Table 3-3 (Cont'd.). Remote Control Operating Instructions

OPERATING PARAMETERS TO BE SELECTED		PROGRAM INSTRUCTION (AT REAR PANEL REMOTE CONNECTOR J5)
NAME	TYPE	
ıter Frequency	100 HZ to 999 HZ	Ground Pin A-2
ıge	1 KHZ to 9.99 KHZ	Ground Pin B-1
	10 KHZ to 99.9 KHZ	Ground Pin A-4
	100 KHZ to 1.5 MHZ	Ground Pin B-3
viation Sensi-	±7.5%	Ground Pin C-4
ity (for all	±15%	Ground Pin D-3
odels except the	±30%	Ground Pin C-6
40-M5).	±40%	Ground Pin D-5
viation Sensi-	±7.5%	Ground Pin C-4
ity (for the	±15%	Ground Pin D-3
odel 4140-M5)	±20%	Ground Pin D-5
	±30%	Ground Pins H-11 and C-6
	±40%	Ground Pins H-11 and G-10
ta Cutoff	MSD	
equency Digits		
	1	Ground Pin D-9
	2	Ground Pin C-10
	3	Ground Pins D-9 and C-10
	4	Ground Pin D-7
	5	Ground Pins D-7 and D-9
	6	Ground Pins D-7 and C-10
	7	Ground Pins D-7, C-10 and D-9
	8	Ground Pin C-8
	9	Ground Pins C-8 and D-9
	MSD-1	
	1	Ground Pin F-1
	2	Ground Pin E-2
	3	Ground Pins F-1 and E-2
	4	Ground Pin D-11
	5	Ground Pins D-11 and F-1
	6	Ground Pins D-11 and E-2
	7	Ground Pins D-11, E-2, and F-1
	8	Ground Pin C-12
	9	Ground Pins C-12 and F-1

Table 3-3 (Cont'd.). Remote Control Operating Instructions

OPERATING PARAMETERS TO BE SELECTED		PROGRAM INSTRUCTION (AT REAR PANEL REMOTE CONNECTOR J5)
NAME	TYPE	
ata Cutoff requency Digits Cont'd.)	MSD-2	
	1	Ground Pin F-5
	2	Ground Pin E-6
	3	Ground Pins F-5 and E-6
	4	Ground Pin F-3
	5	Ground Pins F-3 and F-5
	6	Ground Pins F-3 and E-6
	7	Ground Pins F-3, E-6, and F-5
	8	Ground Pin E-4
	9	Ground Pins E-4 and F-5
ata Cutoff requency Range	1 HZ to 9.99 HZ	Ground Pin E-10
	10 HZ to 99.9 HZ	Ground Pin F-9
	100 HZ to 999 HZ	Ground Pin E-12
	1 KHZ to 9.99 KHZ	Ground Pin H-13
	10 KHZ to 99.9 KHZ	Ground Pin F-11
	100 KHZ to 300 KHZ	Ground Pin G-8
utput Filter esponse	CA	Ground Pin F-7
	CD	Ground Pin E-8
xternal alance Input		Pin H-3
20-Volt Output		Pin G-4
12-Volt Output		Pin G-6
round		Pins G-2, H-1, and H-7

2.3 Tape-Speed-Compensation (TSC) System

me discriminators may be used in a tape-speed-compensation (TSC) system nnected as is shown in Figure 3-4. This system requires a reference dis- iminator and a signal delay unit to be used in conjunction with the Model 4140 scriminator. The Models 4140-02, 4140-04, and 4140-06 contain TSC cap- ility.

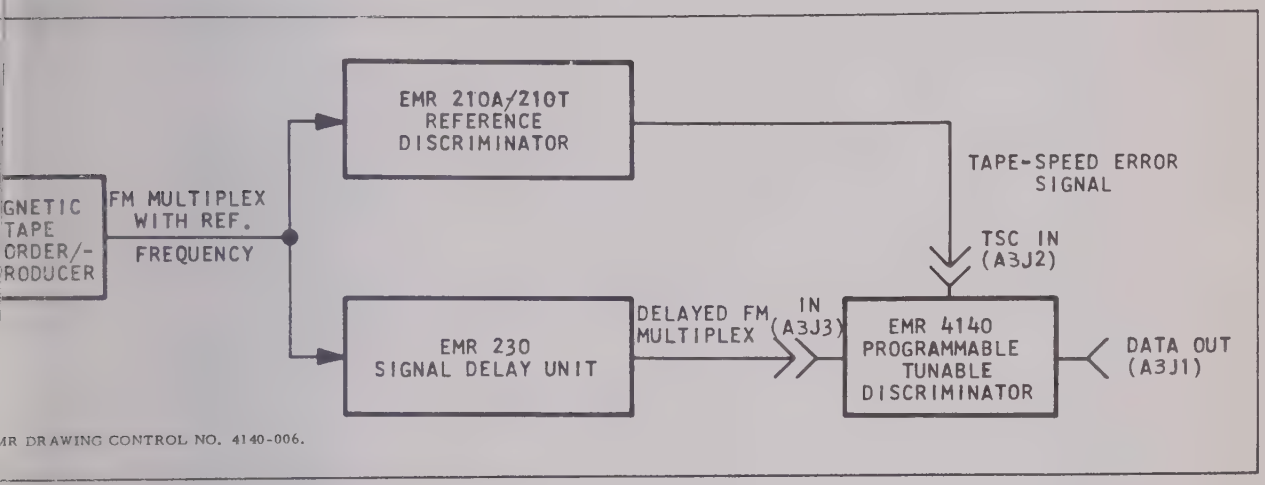

Figure 3-4. Tape-Speed-Compensation System, Block Diagram

this system, the prerecorded FM multiplex is applied to a reference dis- iminator and a signal delay unit. The reference discriminator accepts the ference frequency from the FM multiplex and detects any reference fre- ency modulation incurred during the recording or playback process. Any ference-frequency modulation results in a tape-speed-error signal at the ference discriminator output.

e signal delay unit delays the FM multiplex an amount equal to the delay in reference discriminator. The delayed FM multiplex and the tape-speed- ror signal are then applied to the Model 4140 via connectors A3J3 and A3J2, spectively. A bandpass input filter in the Model 4140 extracts the subcar- er channel from the FM multiplex and an FM detector detects the data in that annel.

tape-speed variations have occurred, these variations result in erroneous bcarrier modulations and would be detected as data in that subcarrier chan- . However, the tape-speed-error signal controls the FM detector compen- ing for the erroneous modulations and only the true subcarrier channel data applied to the Model 4140 data output.

TSC is not used, the TSC input A3J2 must be shorted to ground. A shorting g is attached to the discriminator rear panel for this purpose.

Tape-Speed-Compensation (TSC) Gain and Delay Adjustment

SC gain and delay are factory adjusted for optimum operation over a wide of subcarrier frequencies. More TSC improvement for a particular sub-er channel may be obtained by adjusting the gain and delay to match the cteristics of that channel; however, once these adjustments are made, or maintenance is performed in the TSC circuit, the gain and delay adjust-s must be made each time a new subcarrier channel is selected. To per-the TSC gain and delay adjustments, proceed as follows:

a. Equipment required--

1. Signal Generator: Hewlett Packard 200 CD or equivalent.

2. DC Power Supply: Power Designs 4005 or equivalent.

3. DC Voltmeter: John Fluke 801 or equivalent.

4. Voltage-Controlled Oscillator: EMR Model 236 or equivalent.

5. Frequency Counter: Beckman 736 OR or equivalent.

6. RMS Meter: Hewlett Packard 400D or equivalent.

7. TSC ON-OFF Toggle Switch.

b. The TSC gain adjustment is as follows:

1. Connect the equipment as shown in Figure 3-5.

2. Adjust the SIG. GEN. for a 1-volt RMS signal at a frequency corresponding to the subcarrier channel center frequency.

3. Adjust the Model 4140 controls to accept the selected subcarrier channel. (Data cutoff frequency setting should correspond to a modulation index [MI] of 5.)

4. Balance the Model 4140 for a 0-volt level at the discriminator DATA OUT.

5. Adjust the SIG. GEN. to a frequency corresponding to 1.03 times the subcarrier channel center frequency.

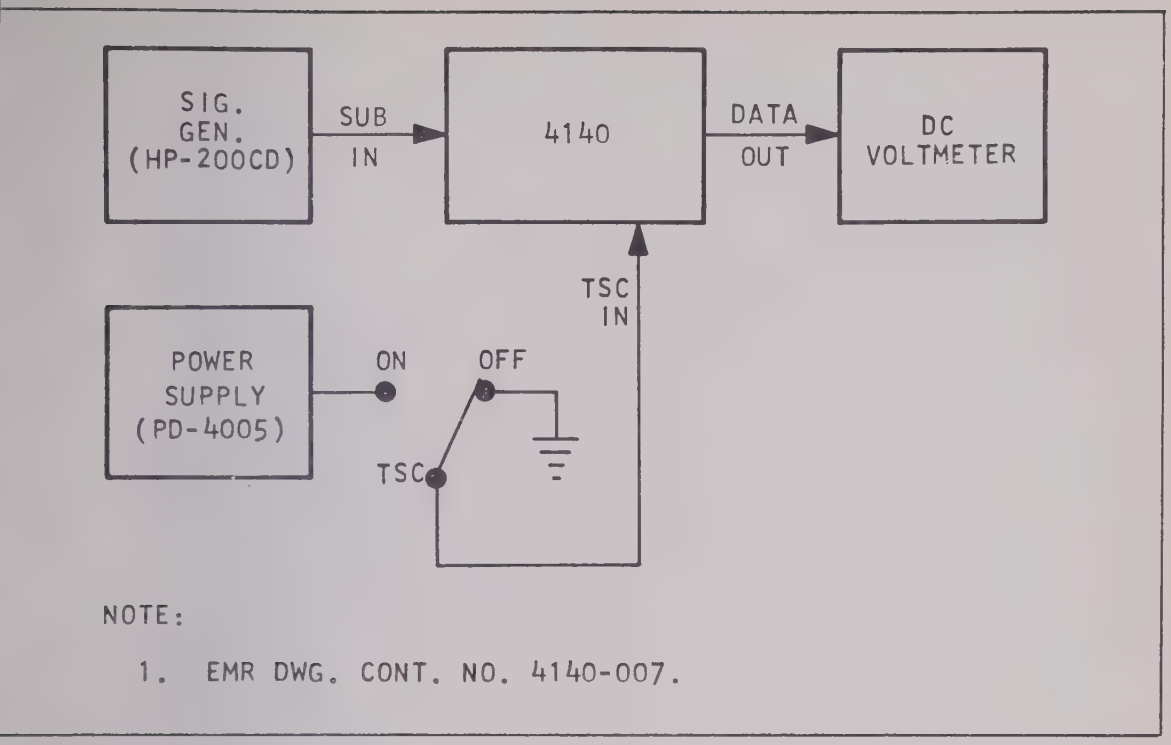

Figure 3-5. TSC Gain Adjustment, Equipment Setup

6. Adjust the POWER SUPPLY for a 4.000-volt DC level and place the TSC ON/OFF switch to ON.

7. On the Model 4140 TSC card A2J4, adjust gain potentiometer R49 (see Figure 5-10) for a 0-volt level at the discriminator DATA OUT.

c. The TSC delay adjustment is as follows:

1. Connect the equipment as shown in Figure 3-6. (Use a positive-sense VCO without the output filter.)

2. With the TSC ON/OFF switch in the OFF position, adjust the VCO for a frequency corresponding to the subcarrier channel center frequency.

3. Adjust the POWER SUPPLY for a 4.000-volt DC level and place the TSC ON/OFF switch to ON.

4. Adjust the VCO DEV SENS to obtain a frequency corresponding to 1.03 times the subcarrier channel center frequency.

5. Connect the equipment as shown in Figure 3-7.

6. Adjust the SIG. GEN. for a 1-volt RMS level at a frequency corresponding to an MI of 5 for the selected subcarrier channel.

7. Position the TSC ON/OFF switch to ON.

8. On the Model 4140 TSC card A2J4, adjust the delay potentiometer R26 for a 0-volt discriminator DATA OUT.

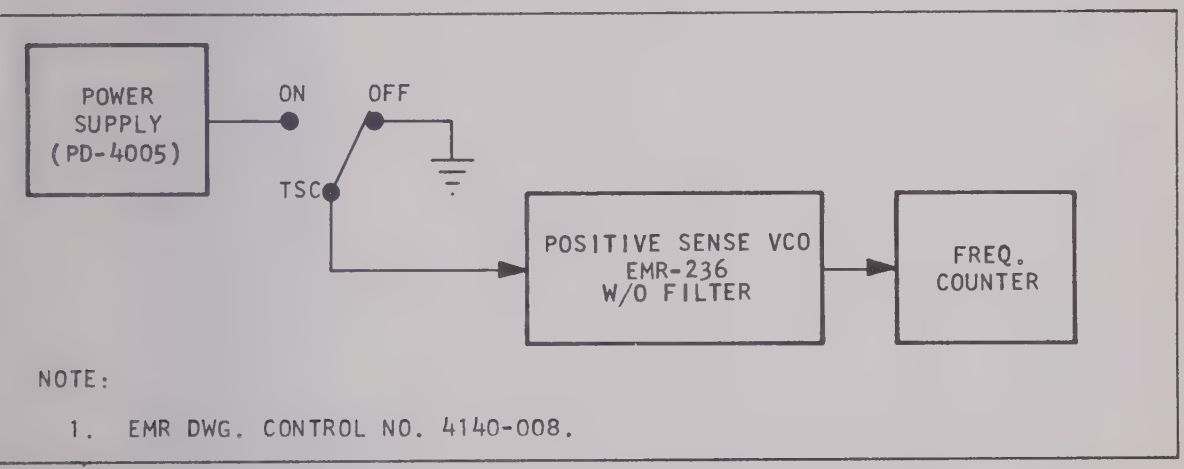

NOTE:

1. EMR DWG. CONTROL NO. 4140-008.

igure 3-6. VCO Calibration for TSC Delay Adjustment, Equipment Setup

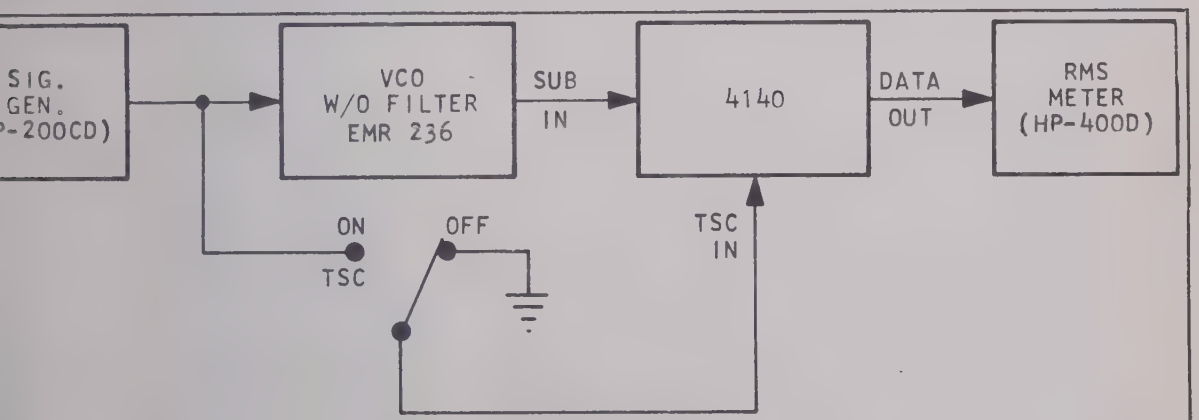

E:

. EMR DWG. CONTROL NO. 4140-009.

Figure 3-7. TSC Delay Adjustment, Equipment Setup

SECTION 4

THEORY OF OPERATION

GENERAL

s section contains the functional theory of operation for the Model 4140
grammable Tunable Discriminator. The theory discussion is presented at
levels, general theory of operation, contained in paragraph 4.2 and de-
ed theory of operation, contained in paragraph 4.3. The general theory of
ration is discussed with reference to the simplified block diagram shown in
ure 4-1. The detailed theory of operation is discussed with reference to the
ailed block diagram, shown in Figure 4-2, and simplified schematic diagrams
grated with the particular discussions. Detailed schematic diagrams are
tained in Section 5 of this manual.

GENERAL THEORY OF OPERATION

e discriminator accepts an FM multiplex of subcarrier channels (all units ex-
t the ±40% deviation of the 4140-M5), extracts a subcarrier channel from the
ltiplex, and detects the intelligence data contained in that channel. The ±40%
viation position of the 4140-M5 is for single channel input applications only. The
elligence data is presented at the discriminator output in the form of varying
alog voltages.

s shown in Figure 4-1, an FM multiplex of subcarrier channels is applied to a
nable bandpass input filter (BPIF). Control lines from the front-panel center
equency and deviation switches energize relays in the BPIF circuits which
lect components to extract a particular subcarrier channel from the input
ltiplex. The selected subcarrier channel output is applied to a front-panel
st jack, used for monitoring purposes, and to a three-stage high-gain limiter
rcuit. The primary function of the limiter circuit is to convert the subcarrier
gnal to a substantially constant-amplitude square wave.

e limiter circuit also provides outputs to a subcarrier amplitude meter circuit
d a zero-signal detector circuit. The subcarrier amplitude meter circuit
ives the front-panel INPUT meter which displays the magnitude of the incoming
bcarrier channel. The zero-signal detector circuit senses a condition in which
e subcarrier channel amplitude drops below a predetermined threshold level
d, when this condition exists, illuminates a front-panel SIGNAL LOSS lamp.
e signal-loss output also activates the clamp relays which clamp the dis-
iminator data output at a ground level.

e Limiter square-wave output is applied to a regenerative trigger circuit
ich provides even further waveshaping and phase-splitting before detecting
e subcarrier channel modulation. Complementary square-wave outputs from
e trigger circuit drive two identical sections of a pulse-averaging FM detector.
ch section of the detector operates on alternate half cycles of the subcarrier

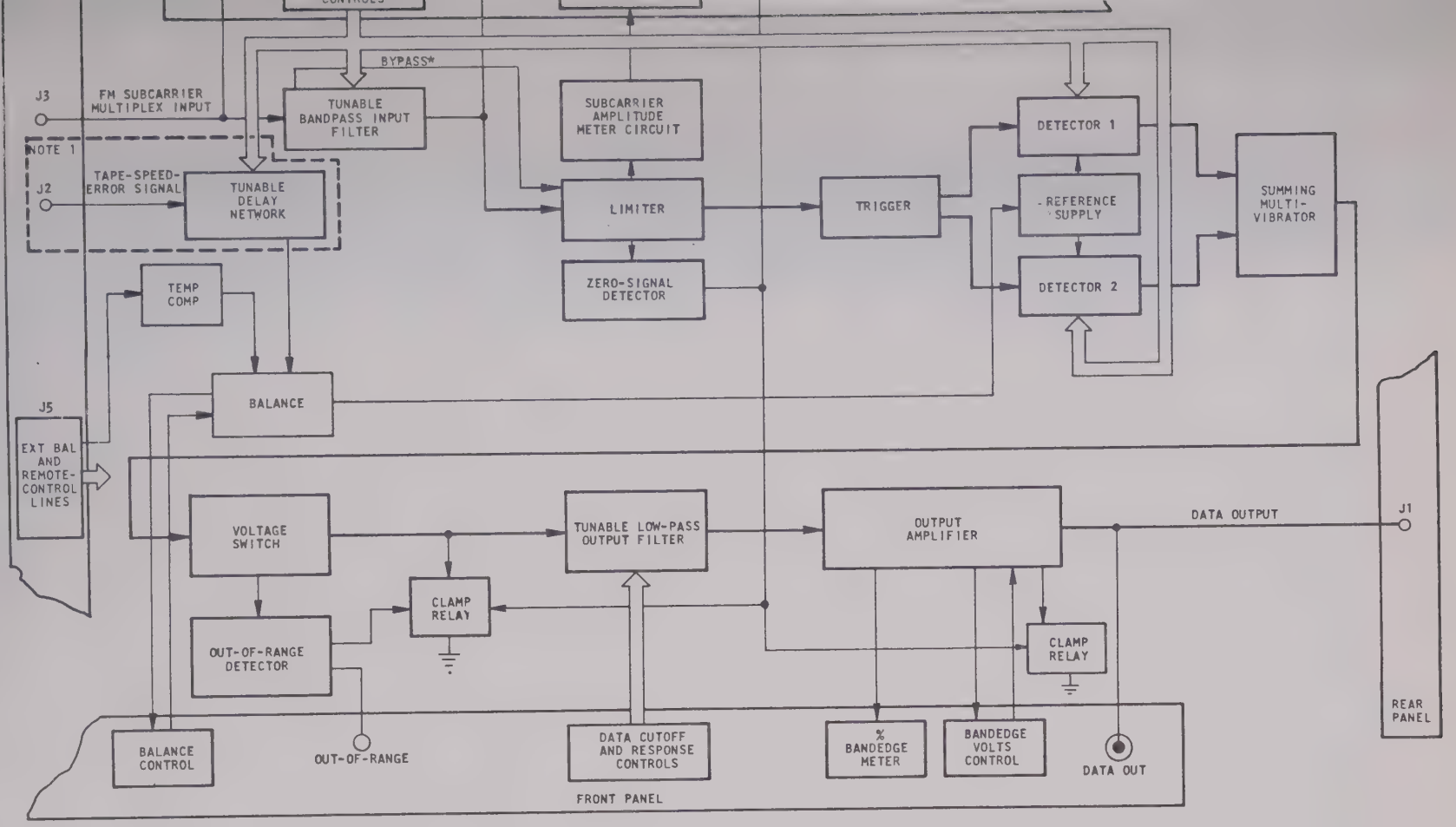

NOTE:

1. USED IN DISC WITH TAPE-SPEED-COMPENSATION FUNCTION (MODELS 4140-02, 4140-04, AND 4140-06)
2. EMR DRAWING CONTROL NO. 4140-010.

*FOR ±40% DEVIATION ON 4140-M5 ONLY.

Figure 4-1. Simplified Block Diagram, Model 4140 Programmable Tunable Discriminator

al to provide a square-wave output with a duty cycle proportional to the FM ulation on the subcarrier input signal.

detector outputs are summed in a high-speed summing multivibrator uit and applied to a voltage switch circuit. The voltage switch circuit es- ishes precise amplitude levels of the detected subcarrier signal before ring in an output filter to recover the low frequency intelligence data con- ed in the subcarrier channel.

ther output from the voltage switch drives the out-of-range detector circuit. s circuit senses a condition in which the incoming subcarrier frequency is iciently above or below the prescribed frequency of the subcarrier channel dedge. When this condition occurs, the out-of-range detector circuit acti- es the clamp relay and illuminates the front-panel OUT OF RANGE lamp. clamp relay clamps the voltage switch circuit output at a ground level, reby removing any signal at the discriminator data output.

voltage switch circuit output is applied to a tunable low-pass output filter. trol lines from front-panel data-cutoff switches and range switches energize ays in the output filter which select components to pass only the low-frequency lligence data in the subcarrier channel. The output filter response character- cs (constant-amplitude or constant-delay) are selected by a front-panel SPONSE switch.

output amplifier circuit is employed at the discriminator data output to vide current drive capability for output recording and readout devices. This cuit also provides an output to the front-panel % BANDEDGE meter which plays a relative indication of the magnitude and direction of the subcarrier iation. The discriminator output voltage, representing a bandedge of the carrier channel, is adjusted by a front-panel BANDEDGE VOLTS control.

er functional circuits in the discriminator include a temperature compensa- circuit, a tunable delay network for tape-speed-error signal, a detector ance circuit, and a reference supply. The temperature compensation circuit, ance circuit (including the front-panel balance control), and reference supply trols the detector outputs to provide a zero-volt discriminator data output n the subcarrier input is operating at center frequency.

same principle is used in discriminators containing the tape-speed-compen- on function. In these units, the tape-speed-error signal is applied to a able delay network. Control lines from front-panel center frequency and iation switches activate relays in the delay network to select components ch delay the tape-speed-error signal input an amount equal to the delay in discriminator BPIF. The tape-speed-error signal is then applied to the ance circuit which modulates the reference supply again controlling the ector outputs to compensate for tape-speed variations.

discriminator may be remotely programmed and operated by external
ment such as a computer, remote control panel, or programmer. In this
of operation, the discriminator operating parameters are selected by ap-
g external signals to remote control lines at the rear-panel remote
ector. These control lines are routed to the same circuits as the front-
control lines and control the discriminator in the same manner as previ-
described. An external balance (EXT. BAL.) input operates in conjunction
the temperature-compensation circuit to balance the detectors from a
te location.

DETAILED THEORY OF OPERATION

detailed theory of operation contains a description of each functional circuit
e discriminator. These circuits are shown on the detailed block diagram,
re 4-2, and are discussed with reference to this diagram and simplified
matic diagrams shown in Figures 4-3 through 4-9. For detailed schematic
rams, refer to Section 5 of this manual.

1 Bandpass Input Filter (BPIF)

BPIF is a two-section active filter designed to extract one subcarrier chan-
from an input multiplex of subcarrier channels. This is true of all units ex-
the ±40% DEVIATION setting on the 4140-M5. For the ±40% DEVIATION
ing on the 4140-M5, the BPIF is bypassed as shown in Figure 4-2A. The
riminator for this deviation is then used only in single-channel input appli-
ons. Components of the BPIF are contained on printed-circuit cards in card-
locations A2J1, A2J2, and A2J3. The two sections of the BPIF are contained
rinted-circuit cards in A2J1 and A2J3, and associated circuits are contained
he Input Card, A2J2.

FM multiplex input is applied through rear-panel connector A3J3 to an input
lifier on the Input card A2J2. This circuit provides proper terminating
edance for the FM multiplex. The input impedance is greater than 100K
s resistive for all frequencies within the range of discriminator operation.
output of this amplifier is applied through a second amplifier stage to the
t pole of the BPIF.

first BPIF section (A2J1), containing two poles, operates essentially as a
dpass section and the second BPIF section (A2J3), also containing two poles,
rates as a low-pass section. These two sections connected in series form a
dpass filter configuration tuned to pass only the assigned frequencies of the
cted subcarrier channel. The two BPIF sections are isolated by an isolation
lifier on the Input card, A2J2, thus eliminating any interaction between the
sections. Center frequency and bandwidth adjustments in each section are
e by energizing relays in the BPIF which select components necessary to
vide the proper BPIF frequency response. These relays are controlled by
er the front-panel center frequency and deviation switches or remote-control
ts from an external source. A front-panel CONTROL switch provides a
ns of switching from local control to remote control.

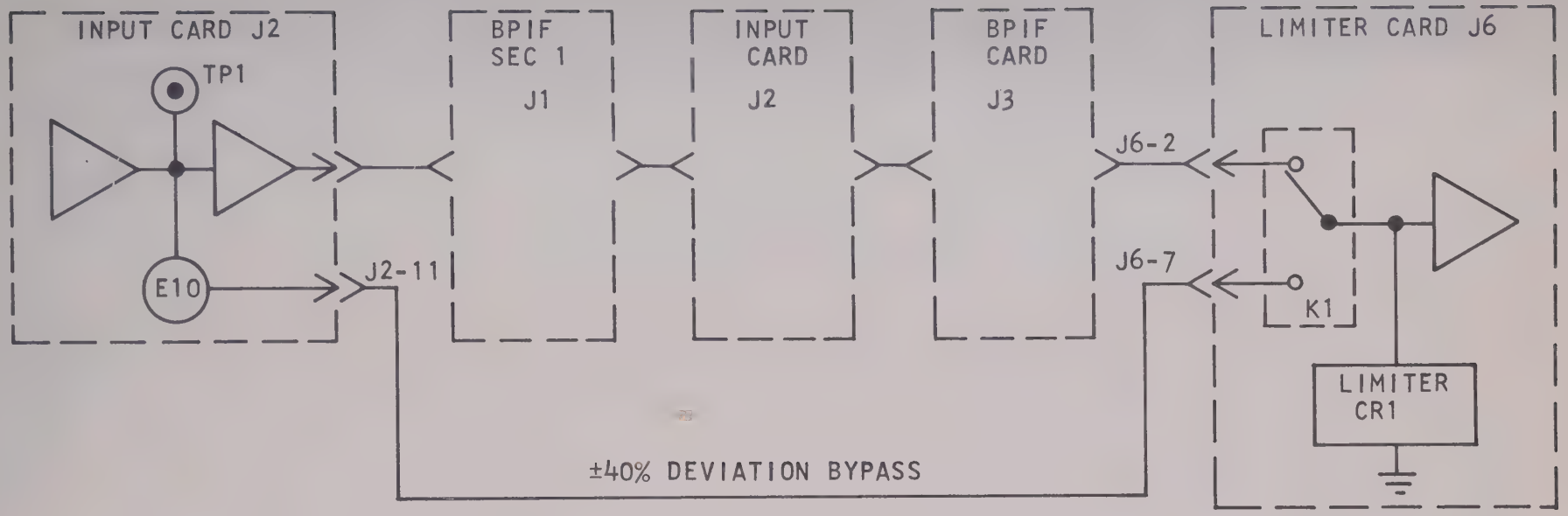

NOTE:

1. USE THIS DRAWING IN CONJUNCTION WITH FIGURE 4-2.

Figure 4-2A. Model 4140-M5 ±40% Deviation Bypass

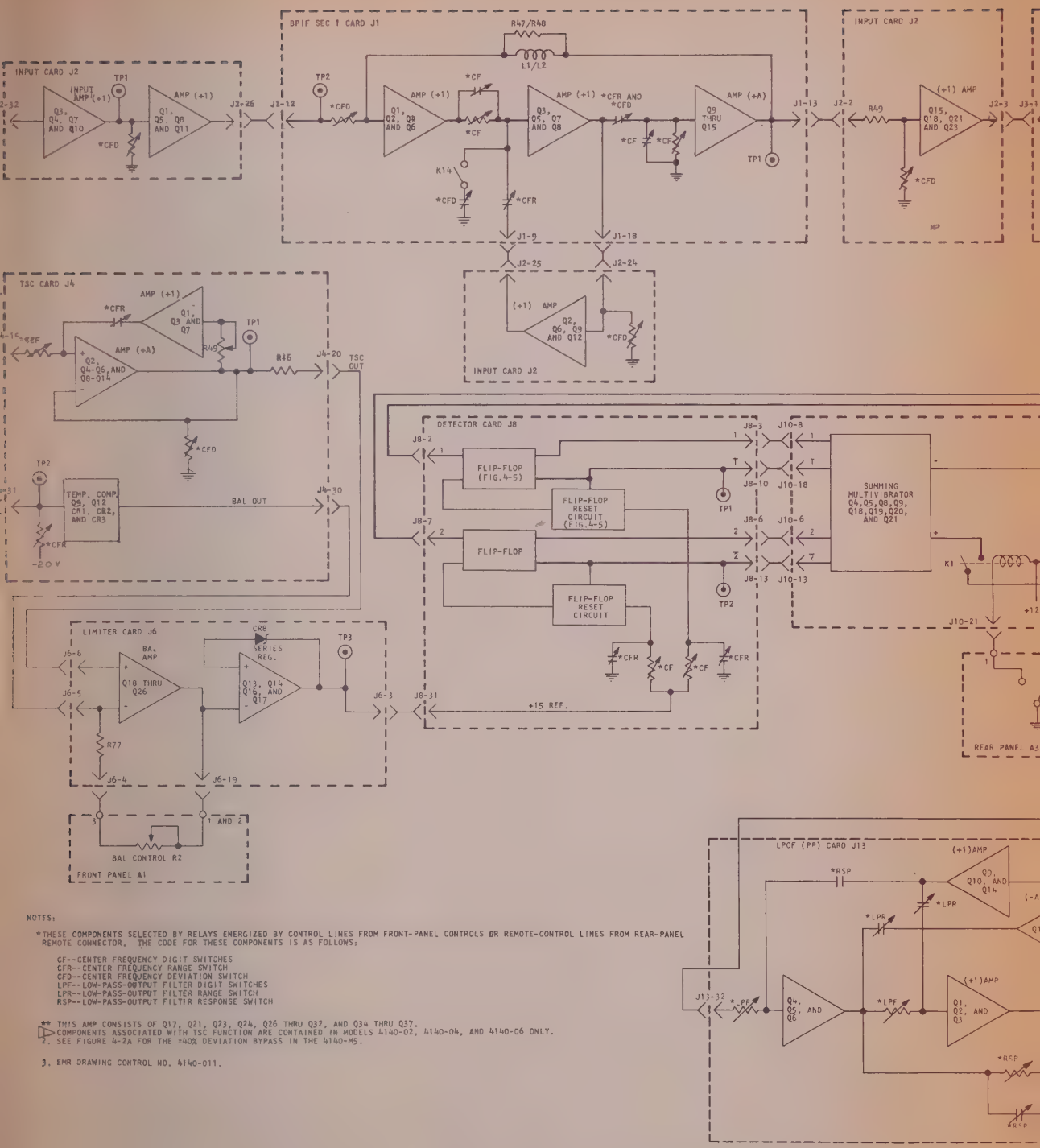

NOTES:

*THESE COMPONENTS SELECTED BY RELAYS ENERGIZED BY CONTROL LINES FROM FRONT-PANEL CONTROLS OR REMOTE-CONTROL LINES FROM REAR-PANEL REMOTE CONNECTOR. THE CODE FOR THESE COMPONENTS IS AS FOLLOWS:

CF--CENTER FREQUENCY DIGIT SWITCHES
CFR--CENTER FREQUENCY RANGE SWITCH
CFD--CENTER FREQUENCY DEVIATION SWITCH
LPF--LOW-PASS-OUTPUT FILTER DIGIT SWITCHES
LPR--LOW-PASS-OUTPUT FILTER RANGE SWITCH
RSP--LOW-PASS-OUTPUT FILTER RESPONSE SWITCH

↔ THIS AMP CONSISTS OF Q17, Q21, Q23, Q24, Q26 THRU Q32, AND Q34 THRU Q37.
▷ COMPONENTS ASSOCIATED WITH TSC FUNCTION ARE CONTAINED IN MODELS 4140-02, 4140-04, AND 4140-06 ONLY.
2. SEE FIGURE 4-2A FOR THE ±40% DEVIATION BYPASS IN THE 4140-M5.

3. EMR DRAWING CONTROL NO. 4140-011.

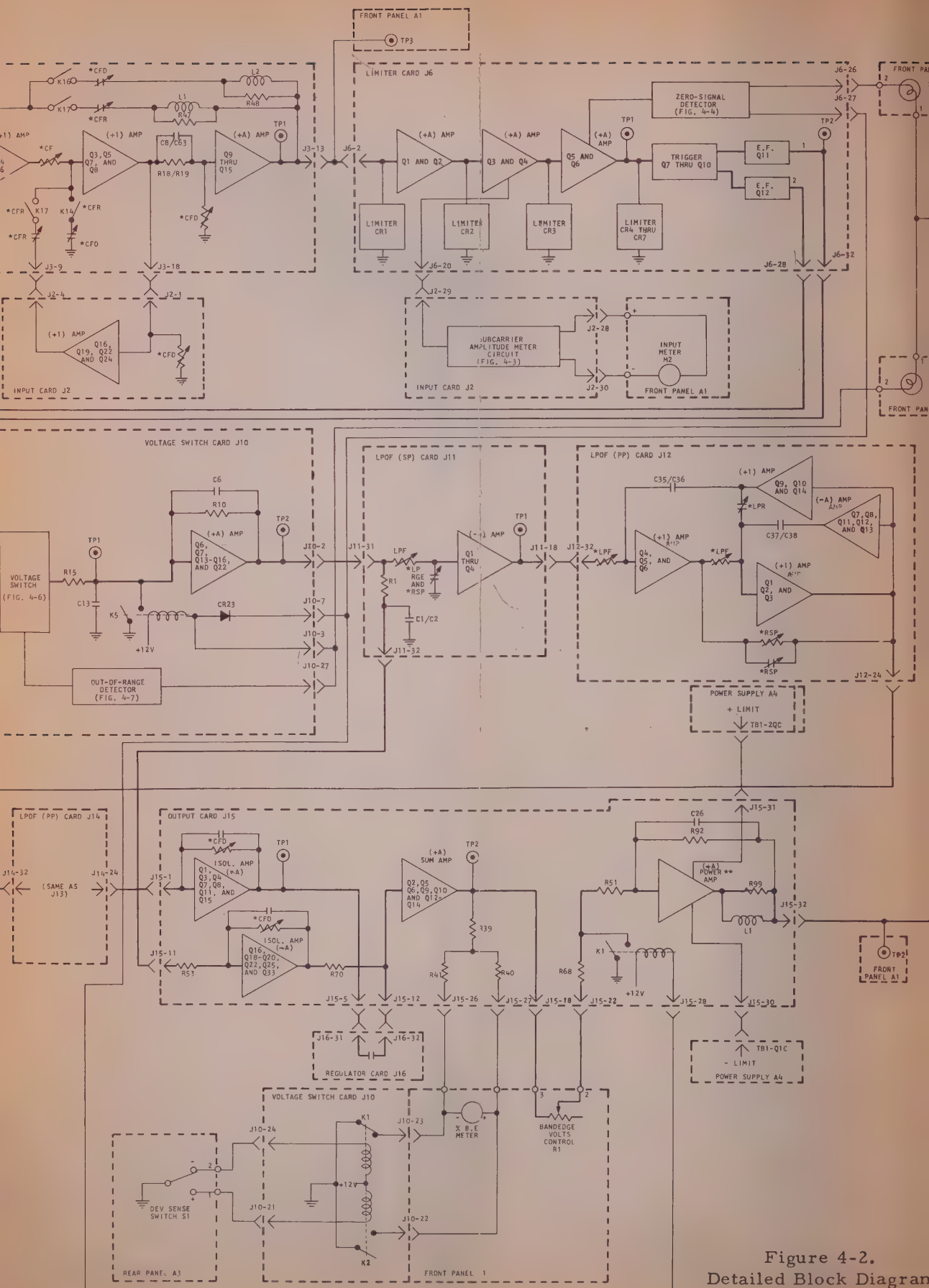

Figure 4-2.
Detailed Block Diagram

included within the BPIF sections are isolation amplifiers. These are input-impedance and low-output-impedance unity-gain amplifiers which te portions of the feedback networks, thereby eliminating interaction be- n response-determining components in the BPIF.

2 Limiter

Limiter is a three-stage high-gain limiter/amplifier circuit which converts ingle channel subcarrier signal into a substantially constant-amplitude re wave. Components of this circuit are contained on the Limiter printed- uit card in the A2J6 card-tray location.

of the limiter stages consists of a clamp diode circuit and an amplifier uit. The clamp diodes limit the voltage swing at the input of each amplifier e thus preventing a saturated condition. The amplifier circuits consist of mitter-follower input stage and a one-transistor amplifier stage. AC ling is employed between limiter stages to provide base-line limiting of the arrier signal, thus eliminating the effect of amplitude modulation and ifier bias changes.

limiter outputs are applied to a subcarrier-amplitude meter circuit, a -signal detector circuit, and a trigger circuit. These circuits are discussed parate paragraphs of this section.

3 Subcarrier Amplitude Meter Circuit

Subcarrier Amplitude Meter circuit is employed to drive an input meter h indicates the magnitude of the incoming subcarrier signal. Components is circuit are contained on the Input printed-circuit card in the A2J2 card- location and the associated input meter is mounted on the discriminator panel.

circuit, shown in Figure 4-3, consists of an operational amplifier, a diode fier circuit, and front-panel INPUT meter. The subcarrier input signal the second stage of the limiter circuit is applied to the operational ampli- consisting of transistors Q13, Q14, Q17, and Q20. The amplifier output is led through capacitor C18, rectified by diodes CR3, CR4, and CR5 and ap- to the INPUT meter. A portion of the amplifier output is applied through stor R63 to complete the operational amplifier feedback loop.

4 Zero-Signal Detector Circuit

Zero-Signal Detector circuit senses a condition in which the incoming arrier signal amplitude is sufficiently low so as to result in possible neous data at the discriminator output. Components of this circuit are ained on the Limiter printed-circuit card in the A2J6 card-tray location.

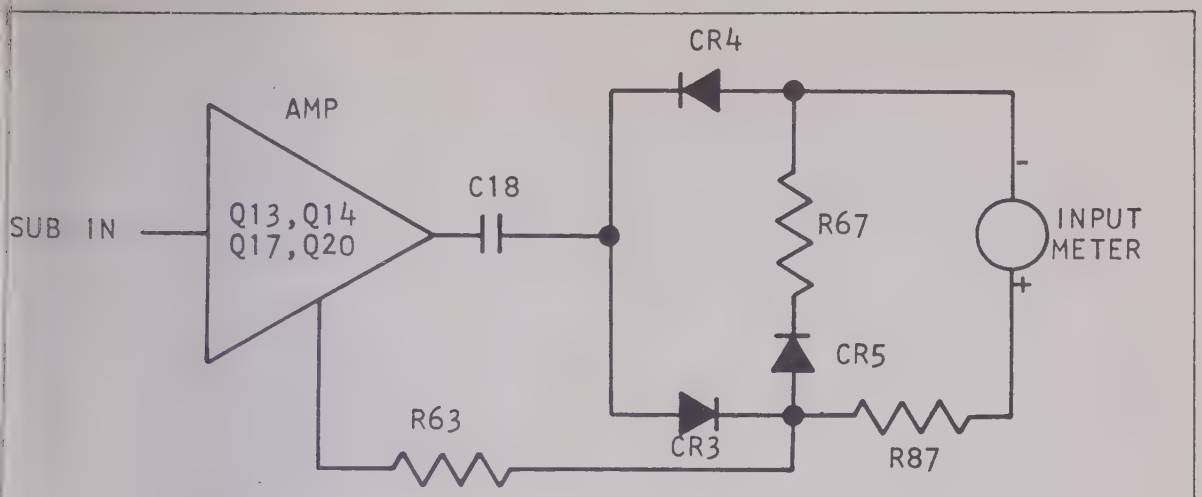

NOTE:

1. EMR DRAWING CONTROL NO. 4140-012.

ure 4-3. Simplified Schematic Diagram, Subcarrier Amplitude Meter Circuit

s circuit, shown in Figure 4-4, consists of an amplifier, a diode rectifier, a nsistor switch, and a comparator. The signal input from the third stage of limiter is amplified by transistor Q27 and half-wave rectified by diode CR9. e rectifier supplies positive-going pulses to transistor switch Q28. If the itive excursions exceed the turn-on voltage of transistor Q28, a ground level nal is applied across capacitor C31 and the comparator will not generate a nal-loss output. If, however, the input voltage to Q28 is not of sufficient plitude to maintain current through Q28, C31 charges toward the +24-volt el triggering the comparator and a signal-loss output is generated. This put illuminates the front-panel SIGNAL LOSS indicator and activates the clamp ays thereby clamping the discriminator output at a ground level. Resistor 2 is used to adjust the threshold level in this circuit.

.5 Trigger Circuit

e Trigger circuit is a nonsaturating regenerative feedback circuit which epts the third-stage limiter output and conditions the subcarrier signal for lication to the FM detector. Components of this circuit are contained on the niter printed-circuit card in the A2J6 card-tray location.

s circuit consists of an input clamp diode stage, a regenerative trigger ge, and emitter-follower output stages. The clamp diodes, CR4 through 7, limit the subcarrier signal amplitude to prevent saturation in the trigger ge. On the positive edges of the subcarrier signal, the regenerative trigger, through Q10, is triggered providing complementary square-wave signals to emitter-follower output stages Q11 and Q12. The Q11/Q12 outputs (180° -of-phase) are then applied to the FM detector circuit.

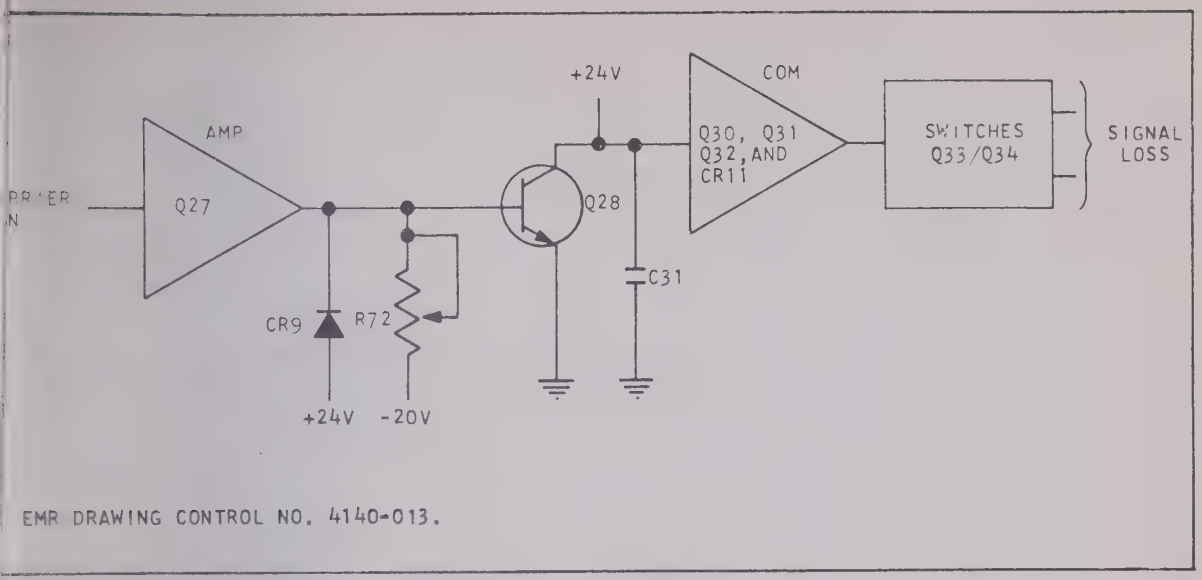

igure 4-4. Simplified Schematic Diagram, Zero-Signal Detector Circuit

.6 FM Detector

e FM Detector contains two identical sections which accept complementary
uare-wave inputs from the Trigger circuit and generate square-wave outputs
h duty cycles proportional to the subcarrier input modulation. Components
his circuit are contained on the Detector printed-circuit card in the A2J8
d-tray location.

ce each section is identical, only Section 1 is discussed in detail. The
cuits of Section 1, shown in Figure 4-5, consist of a flip-flop stage, a
nsistor switch, and a comparator stage. Each positive edge of the square-
ve input from the Trigger circuit sets the flip-flop such that the $\overline{1}$ output de-
ases to approximately −6 volts and the 1 output increases to approximately
volts. With −6-volt level on the base of the transistor switch, Q3, the
tch opens and the capacitor (CFR) begins to charge toward the +15 REF
rce voltage input. As the voltage across the capacitor reaches the value of
V_R, set by diode CR17, the comparator is triggered generating a reset
se to reset the flip-flop. When reset, the $\overline{1}$ flip-flop output increases to ap-
ximately +6 volts and the $\overline{1}$ output decreases to approximately −6 volts. With
6-volt level at the base of Q3, Q3 is saturated discharging the capacitor
FR). Thus, the $\overline{1}$ output remains negative for a predetermined length of time
pending on the charge time of the capacitor. This length of time is nominally
the period of one subcarrier cycle. The positive excursions and the positive
se widths of the $\overline{1}$ output are controlled by the subcarrier signal frequency.
s produces a square-wave output with a duty cycle proportional to the sub-
rier signal modulation.

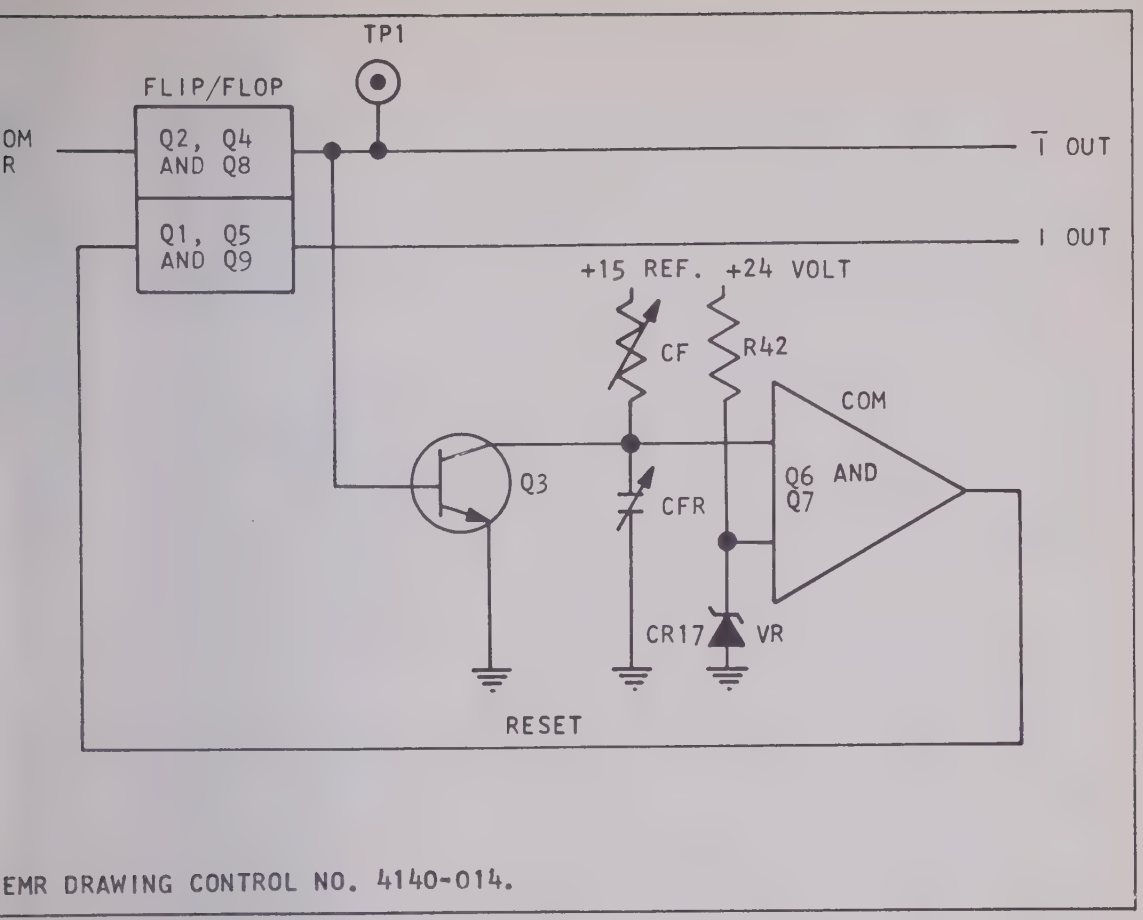

Figure 4-5. Simplified Schematic Diagram, FM Detector Section 1

nable capacitor (CFR) and resistor (CF) connected between the +15 REF voltage and ground, are selected by front-panel center frequency digit nge switches. These components are variable with the selected center ncy to provide the proper RC time-constant for the generation of the flip- set. As the center frequency increases, the RC time constant is decreased the flip-flop reset occurs before the next subcarrier cycle.

r variable input to this circuit is the +15 REF source voltage. A change value of this source voltage will also change the time at which the com- r generates the flip-flop reset. Therefore, the pulse duration of the op output is adjusted by varying the +15 REF source voltage input. The tion and control of this input is discussed in paragraph 4.3.12 of this .

Summing Multivibrator

mming Multivibrator is a high-speed bistable circuit which sums the four tector outputs. Components of this circuit are contained on the Voltage printed-circuit card in the A2J10 card-tray location.

circuit operates essentially as an OR-type bistable multivibrator which is ered on the edges of the four-phase detector square-wave outputs, thereby taining the modulation component. Complementary square-wave outputs this circuit are applied to two relays, K1 and K2. These relays are con- d by the rear-panel DEV SENSE switch which permits selection of positive negative (−) deviation sensitivity.

8 Voltage Switch

Voltage Switch circuit accepts a square-wave input from the summing ivibrator and establishes precise square-wave amplitude levels. This pre- any square-wave amplitude modulation from causing erroneous data in the t filter. Components of this circuit are contained on the Voltage Switch ed-circuit card in the A2J10 card-tray location.

the square-wave input to the Voltage Switch has a duty cycle proportional e subcarrier modulation, the Voltage Switch is triggered on every edge of ncoming square wave, thereby maintaining subcarrier channel modulation onent. A simplified schematic of this circuit is shown in Figure 4-6. As nput square wave is positive going, transistor Q2 is saturated and Q10 is biased to the off state. With Q2 saturated, a zero-volt level is applied gh diode CR2 and resistor R6 which drives transistor Q3 to saturation. this occurs, the $+V_R$, set by diode CR1, is applied through Q3 to the ge switch output. This output remains until the input square wave reverts negative-going transition. On the negative edge, Q2 is turned off and Q10 turated, supplying a 0-volt level through CR5 to transistor Q11. This level s Q11 to saturation and the $-V_R$, set by diode CR6, is applied through Q11 e voltage switch output.

voltage switch output is applied through resistor R15 to an operational ifier which provides impedance matching between the voltage switch and utput filter.

ner function of the voltage switch is to provide outputs to the Out-of-Range ctor circuit. A detailed description of this circuit is contained in para- h 4.3.9 of this section.

9 Out-of-Range Detector

Out-of-Range Detector detects a condition in which the incoming subcarrier l is operating at a frequency above or below the prescribed subcarrier nel bandedge. Components of this circuit are contained on the Voltage h printed-circuit card in the A2J10 card-tray location.

circuit, shown in Figure 4-7, consists of a positive detector and a nega- detector. Since the operation of each detector is identical, only the ve detector is discussed in detail.

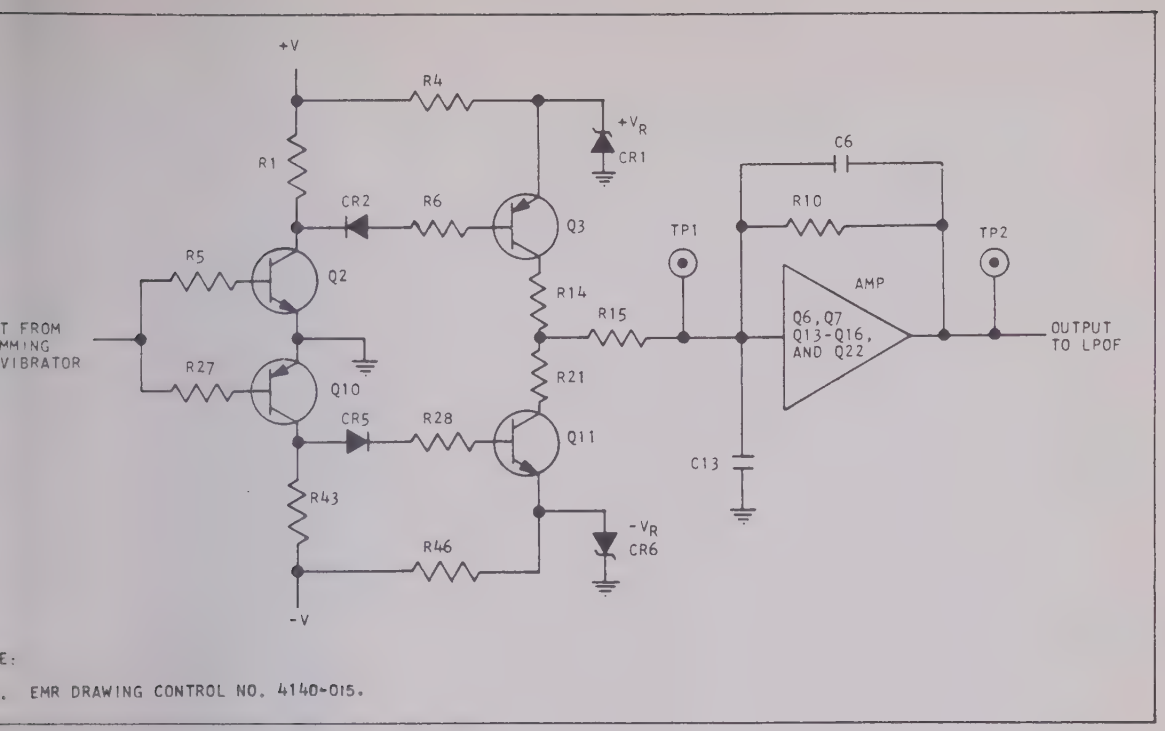

Figure 4-6. Voltage Switch Circuit, Simplified Schematic Diagram

quare-wave output from the first stage of the Voltage Switch is applied gh resistors R16 and R22 and capacitors C29/C30 to ground. The charge scharge of the R/C circuit produces a DC level, proportional to the square signal, which is applied to a comparator (transistors Q23, Q25, Q26, and . A reference voltage ($+V_R$) is preset at the comparator input by transis- Q29 and Q30 (connected as zener diodes) and the tunable resistor connected volts. If the subcarrier input signal deviates beyond the prescribed chan- ndedge, the DC voltage at the comparator input (base of Q25) increases the $+V_R$ and the comparator is triggered. The comparator for this con- supplies a positive voltage to the base of Q35 in the Output Clamp activating relay K5 and the Voltage Switch output is then connected to ground potential.

0 Low-Pass Output Filter

ow-Pass Output Filter (LPOF) is either in a three-, five-, or seven-pole configuration designed to remove the subcarrier channel center frequency nent from the Voltage Switch output and pass only the low-frequency intel- e data contained in the channel. The number of filter poles is dependent he particular discriminator configuration (refer to Section 1, paragraph The three-pole filter provides an 18 Db/octave rolloff, the five-pole provides a 30 Db/octave rolloff, and the seven-pole filter provides a 42 tave rolloff. The first LPOF pole is a single-pole circuit contained on POF (single pole) printed-circuit card in the A2J11 card-tray location. emaining LPOF poles are contained on LPOF (pole pair) printed-circuit in the A2J12, A2J13, and A2J14 card-tray locations.

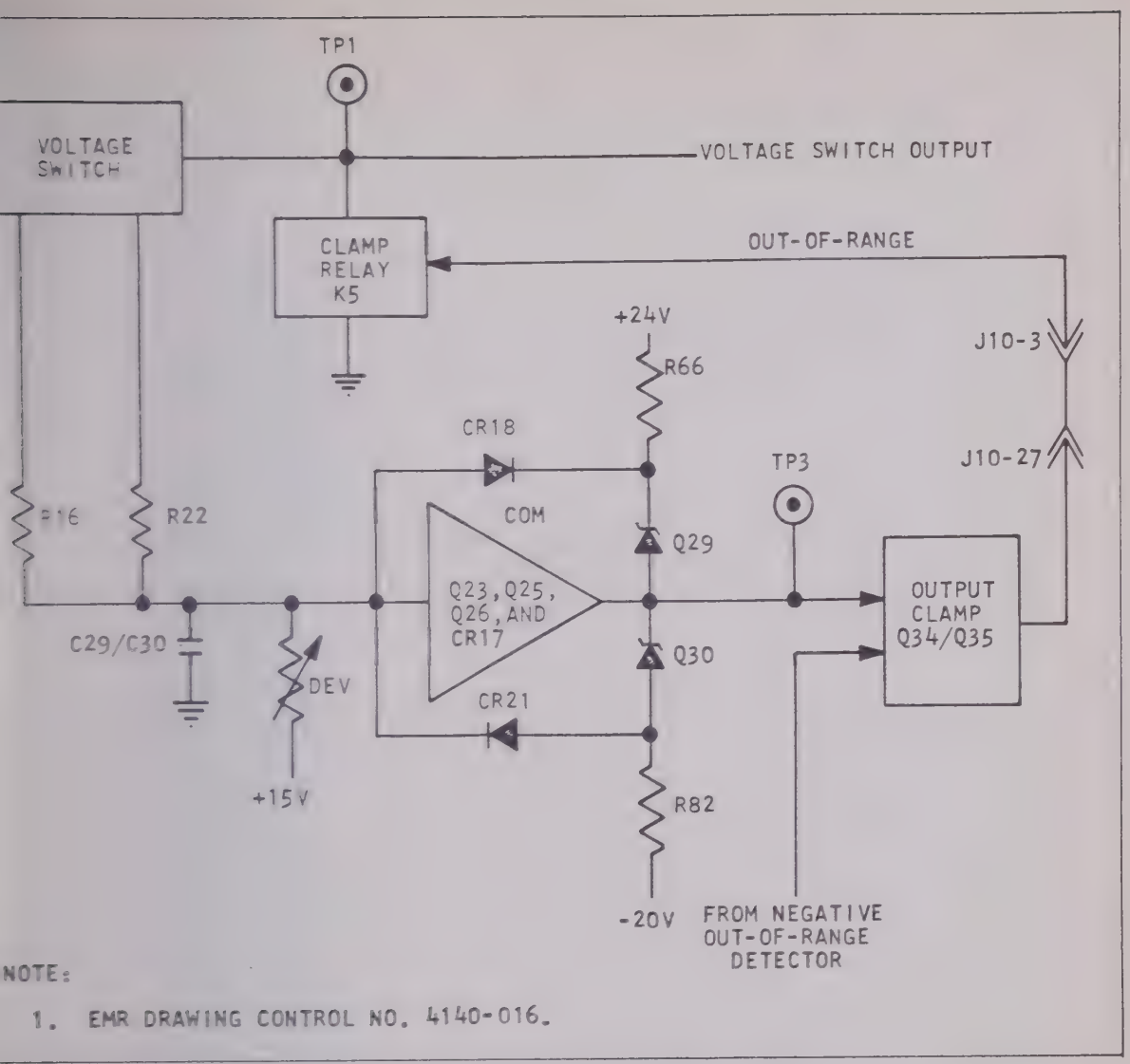

gure 4-7. Positive Out-of-Range Detector Simplified Schematic Diagram

r discriminators containing a three-pole LPOF, the single pole printed-circuit rd A2J11 and the first pole pair printed-circuit card A2J12 is installed in the it. The remaining pole pairs are bypassed. For discriminators containing a e-pole LPOF, the single-pole printed-circuit card A2J11, first pole-pair inted circuit card A2J12, and the second pole-pair printed-circuit card A2J12 is stalled in the unit. The third pole-pair printed-circuit card A2J14 is bypassed. r a seven-pole LPOF, the single-pole printed-circuit card A2J11 and all three le-pair printed-circuit cards A2J12, A2J13, and A2J14 are installed.

shown in Figure 4-2, the voltage switch output is routed to the single-pole ction of the LPOF. The input is then separated into a high-frequency path and ow-frequency (DC) path. The high-frequency component is applied through e high frequency path and is attenuated in the pole sections of the LPOF passing ly the low-frequency intelligence data in the subcarrier channel to the Output rd A2J15. The low-frequency (DC) component is applied through resistor R1, tered by capacitors C1/C2, and applied to the Output card A2J15.

cutoff frequencies and filter response characteristics are determined by onents selected by energizing relays on the LPOF printed-circuit cards. e relays are controlled by control lines from front-panel controls or con- lines from the rear-panel remote connector A3J5.

11 Output Circuits

Output circuits consist of two isolation amplifiers, a summing amplifier, n output power amplifier. Components of these circuits are contained on Output printed-circuit card in the A2J15 card-tray location.

two outputs from the LPOF are applied through isolation amplifiers and are med in a summing amplifier, producing a composite data signal. The iso- n amplifiers also set the discriminator deviation sensitivity by controlling mount of feedback to the amplifier input. The tunable components in these back loops are selected by control lines from the front-panel DEVIATION ch or by control lines from the rear-panel remote connector A3J5.

summing amplifier output (composite data signal) is applied to the front- l % BANDEDGE meter and BANDEDGE volts control. The % BAND- E meter displays a relative indication of the amount and direction of the arrier deviation. The BANDEDGE volts control is used to adjust the input ge to a power amplifier circuit at the discriminator data output. The dis- inator data output voltage, representing a bandedge of the subcarrier signal , may be adjusted to any value up to plus and minus 10 volts (0-volts maxi- voltage swing for the 4140-M5). The discriminator data output is routed from ower amplifier circuit to the rear-panel connector A3J1 and to a front-panel ack TP3.

ent limiting in the power amplifier is provided by + LIMIT and – LIMIT ce voltage inputs from the discriminator power supply A4. These inputs de the source voltage (+18 and –18 volts) for operation of the power ampli- circuit. The maximum current available at the power amplifier output is illiamperes and, as long as this maximum is not exceeded, the circuit perate in a normal manner. However, should the current required at the output exceed 225 milliamperes, the source voltage inputs will drop to a such that the data output current does not exceed the maximum capability. data output is shorted to ground, the source voltage input drops to a zero- evel, thereby preventing damage to the output power amplifier.

12 Balance Circuits

Balance circuit provides a reference input (+15 REF) to the Detector flip- eset circuits. This input controls the time at which the Detector flip-flops eset thereby controlling the pulse duration of the flip-flop outputs. (Refer ragraph 4.3.6 for a description of the Detector circuits.) Components of alance circuits are contained on the TSC and Limiter printed-circuit cards A2J4 and A2J6 card-tray locations.

Balance circuits consist of a balance amplifier circuit, a series regulator uit, and a temperature compensation circuit. The balance amplifier circuit, isting of transistors Q18 through Q26, is controlled by the front-panel ANCE control in the feedback loop to provide a reference voltage output. output is applied to a series regulator (transistors Q13, Q14, Q16, and and zener diode CR8) which provides a stable +15 REF output to the De- or circuits.

temperature compensation (TC) circuit (transistors Q9 and Q12, and diodes , CR2, and CR3) generates a source voltage for the second input of the nce amplifier. The TC source voltage controls the balance amplifier to pensate for drift caused by environmental temperature changes.

n the discriminator is operating in the remote mode of operation, an exter- balance input (EXT BAL IN) is applied from the rear panel remote connector 5 to the TC circuit. This input shunts the tunable resistor CFR to control TC source voltage output. This arrangement provides a means of balancing discriminator Detector circuits from a remote location.

13 Tape-Speed Compensation Circuit (TSC)

TSC circuit, provided in discriminators containing the TSC function, ac- s an external TSC input from a reference discriminator and provides an ut signal controlling the discriminator Detector circuit outputs to compen- for tape-speed variations. This circuit operates in conjunction with the nce circuit (paragraph 4.3.12) to modulate the +15 REF input to the Detector uits. Components of the TSC circuit are contained on the TSC printed-circuit in the A2J4 card-tray location.

TSC input from the external reference discriminator is applied through -panel connector A3J2 to a precision delay network. This network, con- ng of a main amplifier and tunable components in the feedback loops, delays TSC input an amount equal to the subcarrier signal delay incurred in the riminator BPIF. The delay network output (TSC OUT) is applied to the nce amplifier in the Balance circuit again modulating the +15 REF output to Detector.

tunable components in the TSC delay network are selected by relays ener- d by control lines from front-panel controls or remote inputs from the -panel remote connector A3J5.

14 Power Supply and Regulator Circuits

Power Supply and Regulator circuits provide all DC power voltages for riminator operation. These circuits are contained on the Power Supply mbly A4 and Regulator printed-circuit card in the A2J16 card-tray location.

hown in Figure 4-8, the primary power is applied from rear-panel
ector A3J6 through fuse A3F1 to the front-panel POWER switch A1S13.
switch controls application of primary power to the rear-panel blower, B1,
Power Supply transformer T1. Three secondary windings of T1 are con-
d to full-wave diode rectifier assemblies CR1, CR2, and CR3 which rectify
C power providing unregulated DC voltages to discriminator regulator cir-
and front-panel displays. Diode rectifier CR1 supplies unregulated -20
to the -20-volt regulator circuit on the Regulator printed-circuit card,
6, and to the - LIMIT circuit, A4TB1Q1, A4TB1CR1, and A4TB1CR2.
e rectifier CR2 supplies unregulated +24 volts to the +24-volt regulator and
volt regulator circuits on the Regulator printed-circuit card, A2J16, and
e + LIMIT circuit A4TB1Q2, A4TB1CR3, and A4TB1CR4. Diode rectifier
supplies unregulated +12 volts to the +12-volt regulator on the Regulator
ed-circuit card, A2J16, and to the front-panel displays. Since the opera-
of the regulator circuits and the + and - LIMIT circuits are similar, only
ircuits associated with diode rectifier CR1 are discussed.

14.1 -20-Volt Regulator Circuit

-20-Volt Regulator Circuit is shown schematically in Figure 4-9. This
uit consists primarily of a constant current generator, a differential com-
son amplifier, a Darlington-connected series regulator, and a current
ter.

constant current generator, transistor Q24, zener diode CR6, and resistor
operate from the unregulated -20-volt input from diode rectifier CR1 pro-
g a constant current source for the differential comparison amplifier and
es regulator. This configuration in effect increases the performance of the
lator by maintaining a constant current flow regardless of the fluctuations
e unregulated input voltage.

ulation at the -20-volt output is accomplished by comparing a sample of the
ut potential with a voltage reference obtained from zener diode CR10. The
rential comparison amplifier Q31/Q32/Q33, senses the magnitude and
ction of the voltage difference and applies an inverted signal to the Darlington
ected series regulator Q21 and A4Q1. This out-of-phase signal increases
ecreases the biasing of A4Q1 to compensate for the voltage fluctuations at
-20-volt regulated output.

ent supplied to the load is limited by current limiting transistor Q30. This
sistor is biased to the off state during normal operation, however, if exces-
current is drawn through resistor A4TB1R1, Q30 becomes forward biased.
is condition, the collector potential of Q30 increases toward a zero-volt
which decreases the base potential of transistor Q21. The emitter poten-
of Q21 increases toward a zero-volt level, back biasing series regulator
sistor A4Q1 and the regulated -20-volt output drops to a zero-volt level.

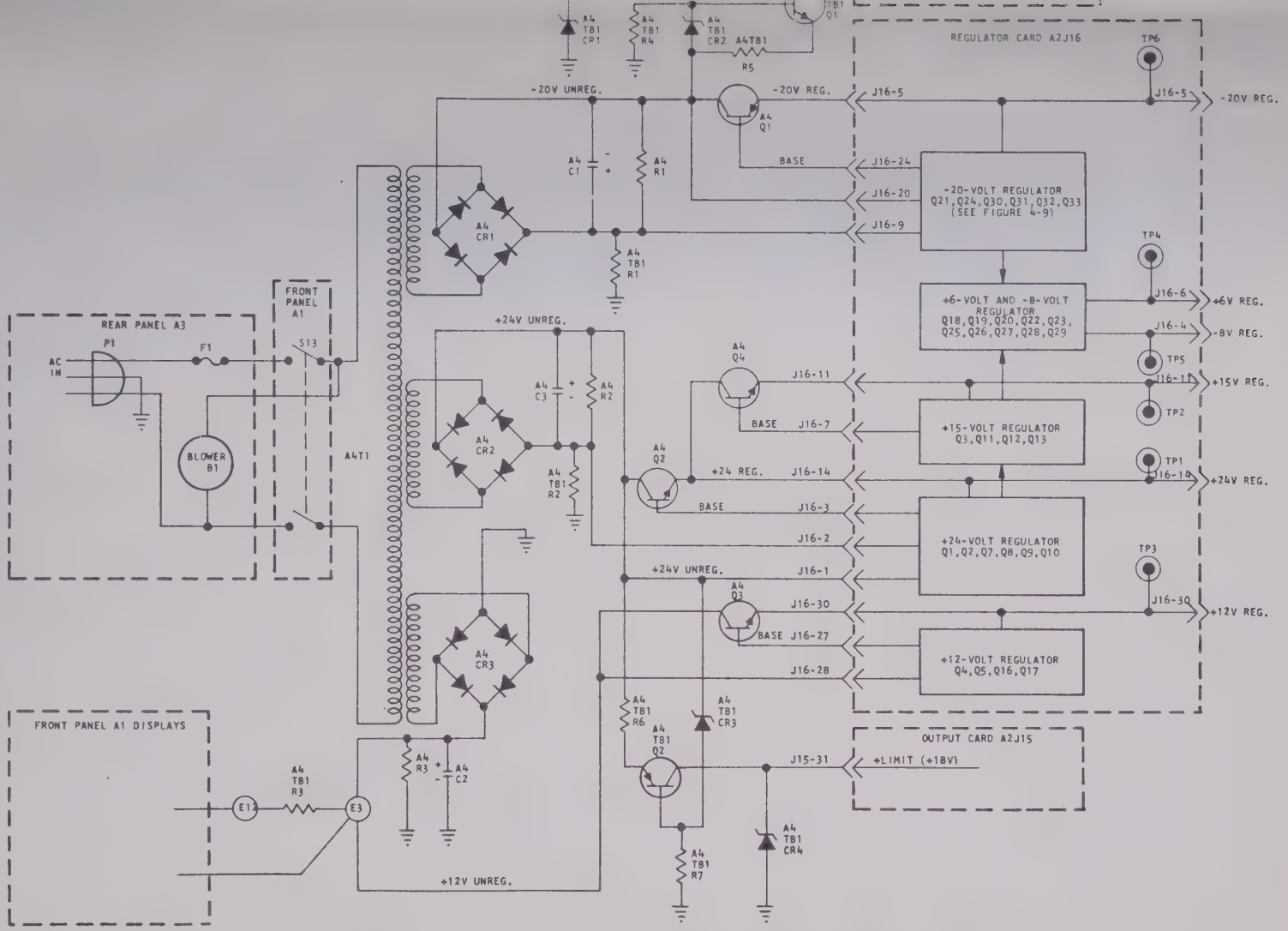

NOTE:

1. EMR DRAWING CONTROL NO. 4140-017.

Figure 4-8. Power Supply and Regulator Circuits, Simplified Schematic Diagram

.14.2 - LIMIT Circuit

- LIMIT circuit, shown in Figure 4-8, uses the unregulated -20-volt put to establish a - LIMIT source voltage (-18 volts) output to the Output d, A2J15. (Refer to paragraph 4.3.11.) The zener diode, A4TB1CR2, nected between the base of transistor A4TB1Q1 and the unregulated -20-volt rce, establishes the base biasing for series regulator A4TB1Q1. Zener de A4TB1CR1 clamps the output at a -18-volt level. This circuit is capable supplying up to 225 milliamperes into the output load and shall maintain reg- tion as long as this maximum current is not exceeded. If the output load uires additional current, the voltage across resistor A4TB1R5 increases ard the potential at the A4TB1Q1 base reference and the output voltage LIMIT) decreases to a level such that the effective current does not exceed maximum capability. Thus, if the output is grounded, A4TB1Q1 is back sed to the off condition and no current is supplied to the load.

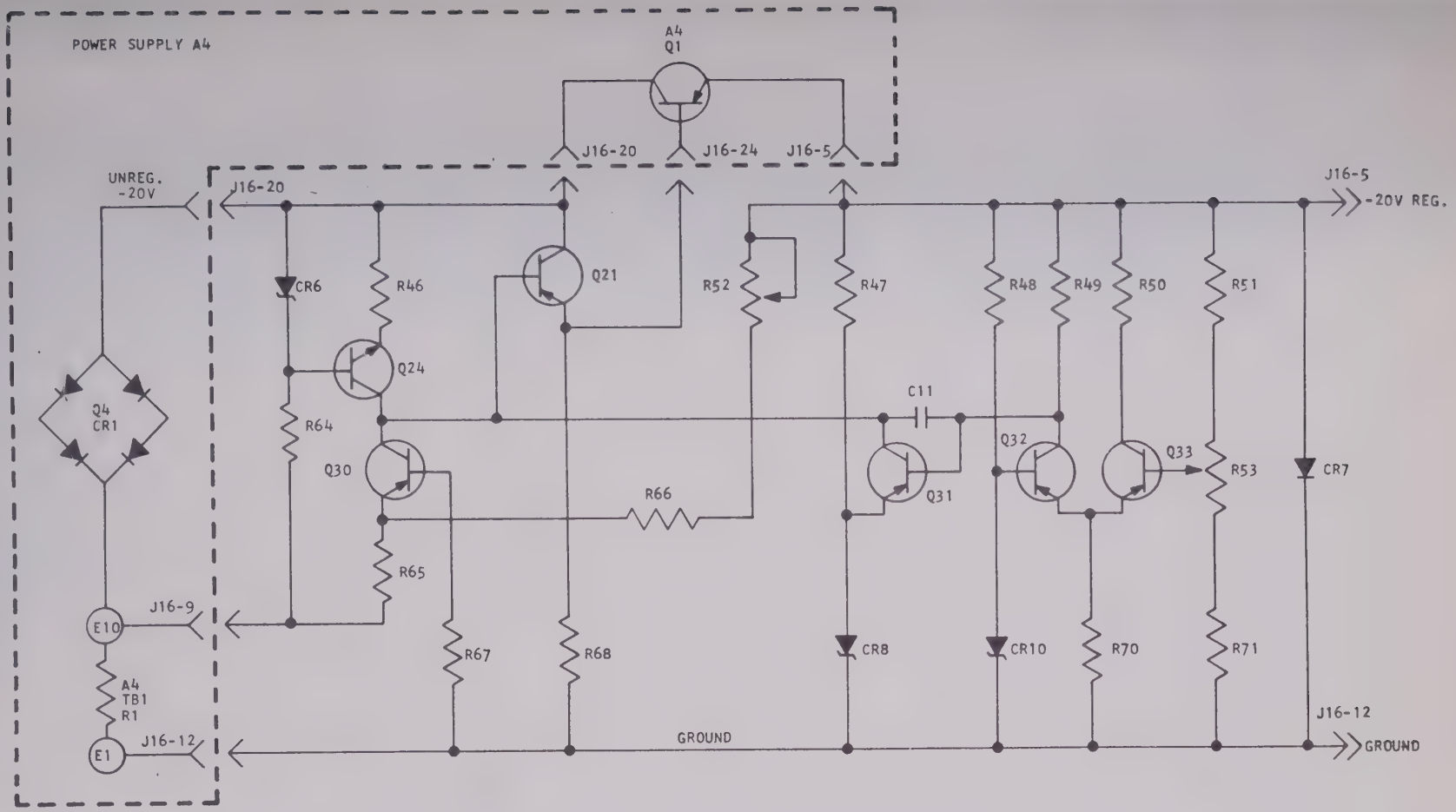

NOTE:

1. EMR DRAWING CONTROL NO. 4140-018.

Figure 4-9. -20-Volt Regulator Circuit, Schematic Diagram

SECTION 5

MAINTENANCE

GENERAL

s section contains information to aid in troubleshooting and maintaining the
del 4140 Programmable Tunable Discriminator. This information is intended
e used in conjunction with the theory of operation, contained in Section 4, so
the maintenance may be performed with maximum efficiency. Included in the
intenance information are troubleshooting guides (paragraph 5.2), test and ad-
ment procedures (paragraph 5.3), wiring (paragraph 5.4), and assembly and
ematic diagrams for discriminator assemblies (Figures 5-1 through 5-32).

2 TROUBLESHOOTING

he event an abnormal condition is detected in discriminator operation, the
owing general method of isolating and repairing the trouble is recommended:

NOTE

The TSC, Limiter, and Detector cards are factory-matched sets and must to used together. Do not replace or exchange any of these cards without including the entire set. If factory repairs are necessary, return all three cards.

a. Perform visual inspection (paragraph 5.2.1).

b. Check discriminator waveforms to isolate the malfunction to a functional circuit (paragraph 5.2.2).

c. Check transistor voltages in the malfunctioning circuit (paragraph 5.2.3).

d. When defective component is located, refer to Section 6, Parts Lists, for replacement component description.

e. Recheck all discriminator waveforms to ascertain that discriminator is operating properly (paragraph 5.2.2).

f. Make necessary readjustments in the affected circuit (paragraph 5.3).

2.1 Visual Inspection

e discriminator should be subjected to a regular inspection program similar
that recommended for other types of electronic equipment. The following in-
ection should be performed periodically as a means of preventive maintenance
if a malfunction occurs, to aid in isolating the trouble.

a. Inspect wiring for loose or broken connections.

b. Inspect front- and rear-panel connectors, switches, and controls for signs of damage.

c. Inspect printed-circuit cards for mechanical damage or component discoloration.

d. Inspect card tray, card guides, and card-mating connectors for signs of damage.

2 Circuit Waveforms

circuit waveforms are designed to isolate a malfunction to a functional
iit in the discriminator. Functional circuits of the discriminator are
ed on printed-circuit cards in the card-tray assembly, A2, in the center
on of the unit. Access to this assembly is obtained by extending the unit
the mounting rack, on the side-mounted slides, and removing the top cover.
printed-circuit-card locations within the card tray are illustrated in Fig-
-1. Access to signals in the discriminator circuits is provided by test
s located on the top surfaces of the printed-circuit cards. The circuit
ions, test-point designations, and waveforms are provided in Table 5-1.

3 Transistor Voltage Measurements

nsistor voltage measurements for the printed-circuit cards are contained
ables 5-2 through 5-12. It should be noted that the voltages are typical
circuits during normal operation and that the actual voltages may differ
ntly from those provided. However, in a malfunctioning circuit, the ac-
readings will differ significantly from the typical voltages. Access to
sistors on the printed-circuit cards is obtained by extending the cards
the card tray using the extender card in card-tray-location J17.

n troubleshooting discriminator circuits, reference should be made to the
sistor voltage table, component location diagram, and schematic diagram
he particular printed-circuit card.

CHECKOUT AND ADJUSTMENT

paragraph contains a procedure for the checkout and adjustment of the
riminator after a defective component is replaced. The procedure may
be used to ensure the operational readiness of the discriminator. The
cations provided in the procedure are typical for all discriminators and the
al indications will vary between units. Therefore, the indications should
be interpreted as discriminator specifications. For discriminator speci-
ions, refer to Section 2 of this manual. If an acceptance test is required,
acceptance test procedure supplied as a separate document should be used.

est Equipment Required

owing test equipment or equivalent is recommended for the tests and ents outlined in this section.

a. DC Voltmeter: John Fluke 801 or equivalent

b. Power Decade: Clarostat 240-C or equivalent

c. Oscilloscope: Tektronix 545A or equivalent

d. Signal Generator: Hewlett Packard 200 CD or equivalent

e. RMS Meter: Hewlett Packard 400D or equivalent

Regulator Circuits (Ref. Figures 5-28 and 5-29)

a. Apply primary power to the Power Supply and Regulator circuits.

b. Check and adjust the +24-volt regulator as follows:

   1. Connect a DC voltmeter between J16TP1 and ground.

   2. Adjust potentiometer J16R16 to obtain a +24-volt ±10-millivolt indication.

c. Check and adjust the +15-volt regulator as follows:

   1. Connect a DC voltmeter between J16TP2 and ground.

   2. Adjust potentiometer J16R20 to obtain a +15-volt ±10-millivolt indication.

d. Check and adjust the −20-volt regulator as follows:

   1. Connect a DC voltmeter between J16TP6 and ground.

   2. Adjust potentiometer J16R53 to obtain a −20-volt ±10-millivolt indication.

e. Check the +12-volt regulator as follows:

   1. Connect a DC voltmeter between J16TP3 and ground.

2. Observe that the voltage is between +10.8 and +13.2 volts.

f. Check the +6-volt regulator as follows:

1. Connect a DC voltmeter between J16TP4 and ground.

2. Observe that the voltage is between +5.4 and +6.6 volts.

g. Check the −8-volt regulator as follows:

1. Connect a DC voltmeter between J16TP5 and ground.

2. Observe that the voltage is between −7.2 and −8.8 volts.

h. Depress the front-panel POWER switch, removing DC power from printed-circuit cards.

i. Remove all card-tray printed-circuit cards except the Regulator card A2J16.

j. Depress the front-panel POWER switch applying power to Regulator card.

k. Using a power decade, connect a 30-ohm load between J16TP1 and ground. Monitor J16TP1 with a DC voltmeter.

l. Rotate potentiometer J16R14 until the voltage at J16TP1 decreases. Reverse the rotation of J16R14 until the +24 volts is restored.

m. Using a power decade, connect a 25-ohm load between J16TP6 and ground. Monitor J16TP6 with a DC voltmeter.

n. Rotate potentiometer J16R52 until the voltage at J16TP6 decreases. Reverse the rotation of J16R52 until the −20-volt level is restored.

o. Depress the front-panel POWER switch, removing DC power from Regulator card.

p. Insert all printed-circuit cards into their proper card-tray location. (Refer to Table 1-2.)

Bandpass Input Filter

a. Using an external signal generator and an RMS meter, apply an unmodulated subcarrier signal of 1 volt RMS at the rear-panel INPUT connector A3J3.

b. Set discriminator front-panel controls to accept the selected subcarrier signal input.

c. Using an RMS meter, observe the BPIF output (front-panel BP OUT test jack) for a 1-volt RMS indication (nominal value).

d. On the external signal generator, deviate the frequency ±7.5% from bandcenter.

e. Position the discriminator front-panel DEVIATION switch to ±7.5%.

f. Observe the RMS meter for a nominal value of −3 Db ±1 Db at the BPIF output (front-panel BP OUT test jack).

g. Check the remaining positions (except the ±40% of the 4140-M5) of the discriminator front-panel DEVIATION switch in a similar manner. For all positions, the BPIF should have unity gain (nominally) from input to output at center frequency and a nominal indication of −3 Db ±1 Db at the bandedges.

Limiter and Trigger Circuit (Ref. Figures 5-12 and 5-13)

a. Using an external signal generator and an RMS meter, apply an unmodulated subcarrier signal of 1 volt RMS at the rear-panel INPUT connector A3J3.

b. Set discriminator front-panel controls to accept the selected subcarrier signal input.

c. Using an oscilloscope, observe the Trigger output (J6TP2) for a 6-volt peak-to-peak squarewave.

d. Vary the subcarrier input amplitude between the minimum input amplitude level and the maximum input amplitude level and observe that the Trigger output (J6TP2) does not change. (Refer to Section 2 for input amplitude level specifications.)

Subcarrier Amplitude Meter Circuit

a. Using an external signal generator and an RMS meter, apply an unmodulated subcarrier signal of 50 millivolts RMS at the rear-panel INPUT connector A3J3.

b. Set discriminator front-panel controls to accept the selected subcarrier signal input.

c. Observe the discriminator front-panel INPUT meter for a 50-millivolt indication.

d. Increase the amplitude of the subcarrier signal input to 5 volts RMS and observe the INPUT meter for a 5-volt indication.

Zero-Signal Detector (Ref. Figures 5-12 and 5-13)

a. Using an external signal generator and an RMS meter, apply an unmodulated subcarrier signal of the minimum input amplitude level at the rear-panel INPUT connector A3J3. (Refer to Section 2 for the minimum input amplitude specification.)

b. Set the discriminator front-panel controls to accept the selected subcarrier signal input.

c. Rotate potentiometer J6R72 until the front-panel SIGNAL LOSS lamp illuminates. Reverse the rotation of J6R72 until the SIGNAL LOSS lamp extinguishes. This adjustment sets the signal loss level.

Detector Circuit (Ref. Figures 5-14 and 5-15)

a. Using an external signal generator and an RMS meter, apply an unmodulated 10 KHz subcarrier signal of 1 volt RMS to the rear-panel INPUT connector A3J3.

b. Set the discriminator front-panel controls to accept the 10-KHz subcarrier signal input.

c. Using an oscilloscope, observe the waveforms at J8TP1 and J8TP2. Waveforms should be as illustrated in Table 5-1, Circuit Waveforms.

d. Deviate the subcarrier signal input to a bandedge of the subcarrier channel.

e. Observe that the pulse duration of the positive excursions vary with a change in frequency and that the pulse duration of the negative excursion does not change.

Voltage Switch Circuit (Ref. Figures 5-16 and 5-17)

a. Using an external signal generator and an RMS meter, apply an unmodulated 10-KHz subcarrier signal of 1 volt RMS to the rear-panel INPUT connector A3J3.

b. Set the discriminator front-panel controls to accept the 10-KHz subcarrier signal input.

c. Using an oscilloscope, observe the waveform at J10TP1. Waveform should be as illustrated in Table 5-1, Circuit Waveforms.

d. Remove the subcarrier signal input to rear-panel INPUT connector A3J3 and observe that the front-panel SIGNAL LOSS and OUT OF RANGE indicators are illuminated.

e. Using a DC voltmeter, monitor J10TP2 and adjust potentiometer J10R29 for a 0-volt indication.

Out-of-Range Detector (Ref. Figures 5-16 and 5-17)

a. Using an external signal generator and an RMS meter, apply an unmodulated subcarrier signal of 1 volt RMS to the rear-panel INPUT connector A3J3.

b. Set the discriminator front-panel controls to accept the selected subcarrier signal input.

c. Using a DC voltmeter, measure the voltages at J10TP3 and J10TP4. These are as follows:

J10TP3-- −5 volts (approximate)
J10TP4-- +5 volts (approximate)

d. Deviate the subcarrier signal input beyond the upper bandedge of the selected subcarrier channel and observe that the front-panel OUT OF RANGE indicator illuminates.

e. Measure the voltage at J10TP4; this should be approximately −5 volts.

f. Deviate the subcarrier signal below the lower bandedge of the selected subcarrier channel and observe that the front-panel OUT OF RANGE indicator illuminates.

g. Measure the voltage at J10TP3; this should be approximately +5 volts.

Low-Pass Output Filter (Ref. Figures 5-18 and 5-19)

a. Using an external signal generator and an RMS meter, apply an unmodulated 10-KHz subcarrier signal of 1 volt RMS to the rear-panel INPUT connector A3J3.

b. Set discriminator front-panel controls to accept the 10-KHz subcarrier signal input. Set data cutoff controls for a modulation index (MI) of 5 (150 Hz).

c. Using an oscilloscope, observe the waveform at J11TP1. Waveform should be as illustrated in Table 5-1, Circuit Waveforms.

d. Deviate the subcarrier signal input to a bandedge of the subcarrier channel.

e. The basic triangular waveform should not change but the DC offset should change approximately ±0.7 volt.

f. Check the other subcarrier channel bandedge in a similar manner.

Output Circuits (Ref. Figures 5-26 and 5-27)

a. Using the card extender, extend the Output card, J15, from the card tray.

b. Remove the subcarrier signal input from the rear-panel INPUT connector A3J3 and observe that the front-panel SIGNAL LOSS and OUT OF RANGE indicators are illuminated.

c. Adjust potentiometer J15R91 as follows:

1. Rotate the front-panel BALANCE control to center the % BANDEDGE meter.

2. Change the switch position of the rear-panel DEV SENSE switch S1 from (+) to (−) to (+), etc. and observe the % BANDEDGE meter for a change in indication. If a change occurs, adjust J15R91 until this change is minimum.

d. Install a clip-lead between J15P11 and ground. Using a DC voltmeter, monitor J15E4 and adjust potentiometer J15R65 for a 0-volt indication. *

e. Connect a DC voltmeter across J15 pins 5 and 12 and adjust potentiometer J15R114 for a 0-volt indication.

f. Remove the clip-lead between J15P11 and ground and reinstall between J15P12 and ground.

g. Using a DC voltmeter, monitor test point J15TP2 and adjust potentiometer J15R37 for a 0-volt indication.

h. Remove the clip-lead between J15P12 and ground.

i. Using a DC voltmeter, monitor the front-panel DATA OUT test jack and adjust potentiometer J15R78 for a 0-volt indication (+5 volts for the 4140-M5).

j. Using an external signal generator and an RMS meter, apply an unmodulated subcarrier signal input of 1 volt RMS to rear-panel INPUT connector A3J3.

k. Set discriminator front-panel controls to accept the selected subcarrier channel.

l. Using a DC voltmeter, monitor the front-panel DATA OUT test jack.

m. Adjust front-panel BALANCE control for a 0-volt indication on the DC voltmeter (+5 volts for the 4140-M5).

n. Deviate the subcarrier signal input to a bandedge of the selected subcarrier channel.

o. Rotate the front-panel BANDEDGE VOLTS control for a ±10-volt (0-volt or +10-volt on the 4140-M5) indication at the front-panel DATA OUT test jack.

p. Change the position of the rear-panel DEV SENSE switch A3S1 and observe that the polarity of the output voltage changes.

g. Deviate the subcarrier signal input to the other bandedge of the selected subcarrier channel and observe that the output voltage is ±10 volts (0-volt or -10-volts on the 4140-M3).

1 Tape-Speed Compensation (TSC) Circuit

discriminators containing the TSC function, the TSC circuit including the delay and gain adjust potentiometers are located on the TSC card in the card tray location. For a delay and gain adjustment procedure, refer to on 3 of this manual.

WIRING

discriminator wiring information is contained on the front-panel schematic am, Figure 5-1, and interconnection wire list, Table 5-13. Additional g information is contained on the detailed block diagram, Figure 4-2, illustrates the prime signal flow and connections within the discrimina- circuits.

Table 5-1. Circuit Waveforms, Model 4140
Programmable Tunable Discriminator

UIT CA- ON	INPUT	WAVEFORM	OSCILLOSCOPE VERT.	OSCILLOSCOPE HORIZ.
TP1	F_c-10 KHz (Unmod) Input Amplitude- 1V RMS	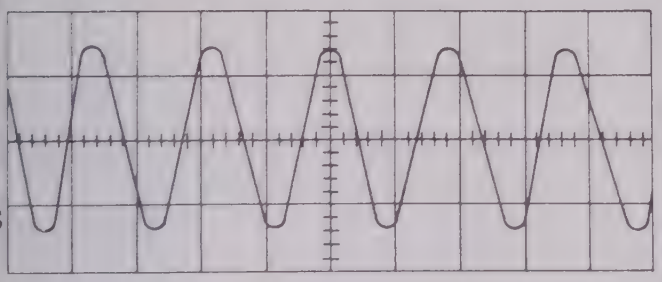	1V/Cm	50 µsec/ Cm
#1 TP2	F_c-10 KHz (Unmod)	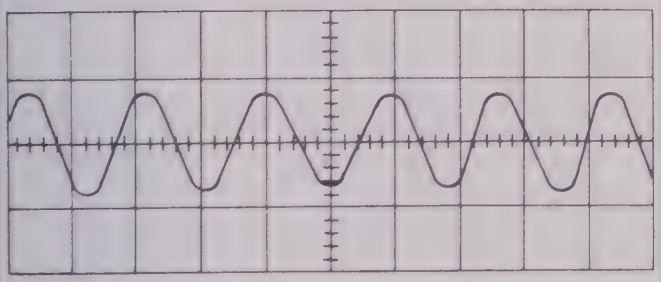	1V/Cm	50 µsec/ Cm
=1 TP1	F_c-10 KHz (Unmod)	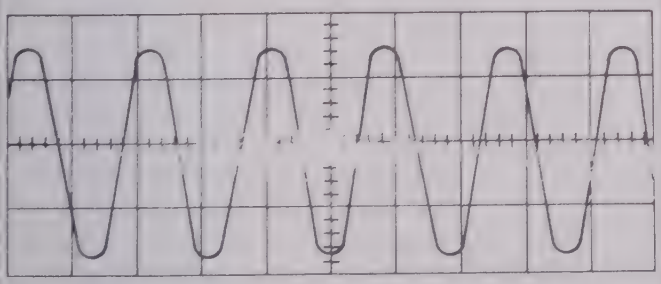	1V/Cm	50 µsec/ Cm
=2 TP2	F_c-10 KHz (Unmod)	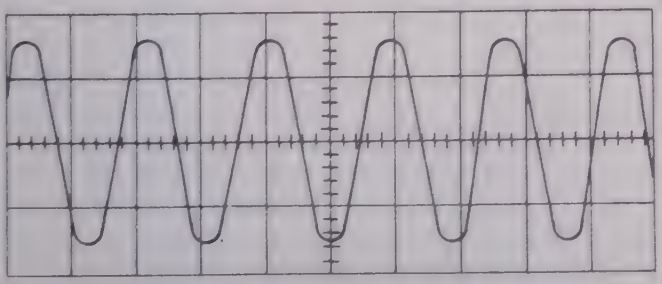	1V/Cm	50 µsec/ Cm

Table 5-1 (Cont'd.). Circuit Waveforms, Model 4140
Programmable Tunable Discriminator

UIT CA- ON	INPUT	WAVEFORM	OSCILLOSCOPE	
			VERT.	HORIZ.
#2 TP1	F_c-10 KHz (Unmod)	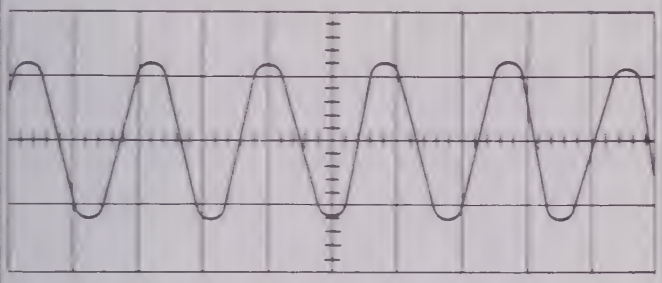	1V/Cm	50 µsec/ Cm
ter TP1	F_c-10 KHz (Unmod)	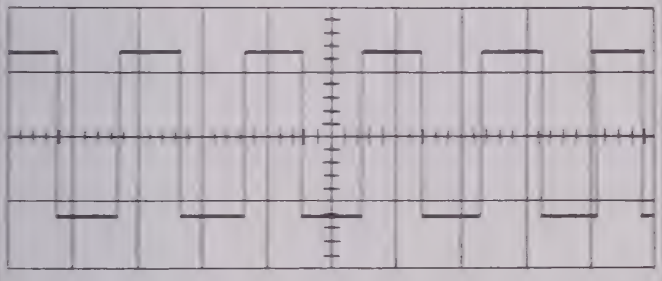	2V/Cm	50 µsec/ Cm
ter TP2	F_c-10 KHz (Unmod)	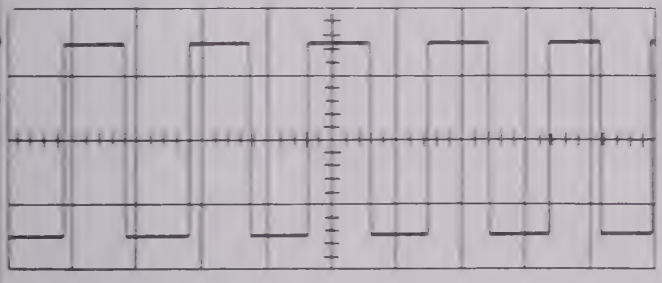	2V/Cm	50 µsec/ Cm
tor TP1	F_c-10 KHz (Unmod)	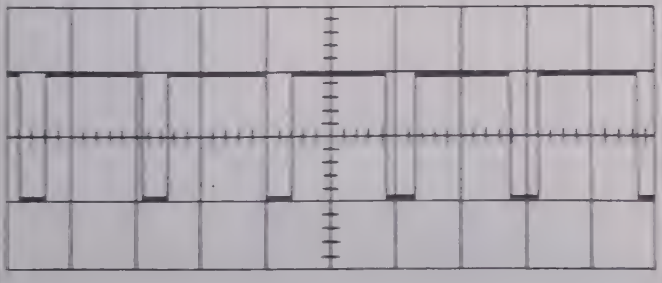	5V/Cm	50 µsec/ Cm

Table 5-1 (Cont'd.). Circuit Waveforms, Model 4140
Programmable Tunable Discriminator

JIT A- ON	INPUT	WAVEFORM	OSCILLOSCOPE	
			VERT.	HORIZ.
tor TP2	F_c-10 KHz (Unmod)	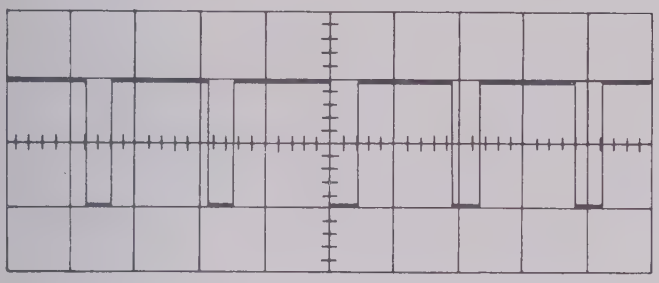	5V/Cm	50 µsec/ Cm
ge ch TP2	F_c-10 KHz (Unmod)	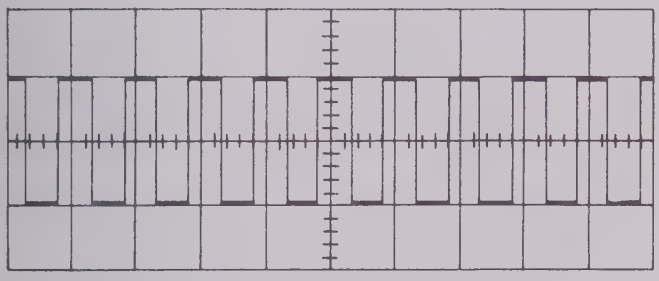	10V/Cm	50 µsec/ Cm
ge ch TP1	F_c-10 KHz (Unmod)	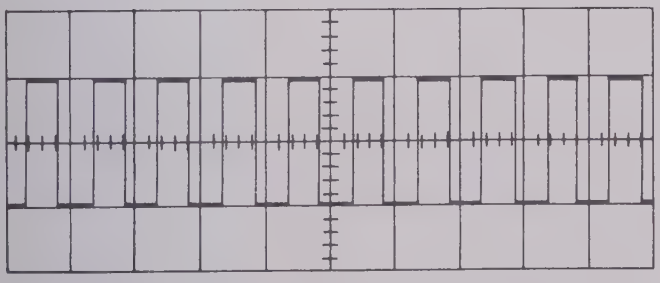	5 V/Cm	50 µsec/ Cm
F TP1	F_c-10 KHz (Unmod)	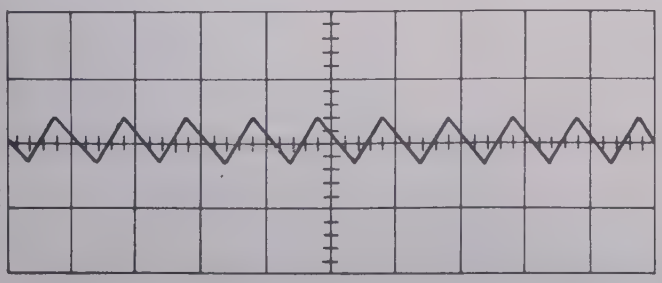	0.5V/Cm	50 µsec/ Cm

Table 5-1 (Cont'd.). Circuit Waveforms, Model 4140
Programmable Tunable Discriminator

UIT CA- ON	INPUT	WAVEFORM	OSCILLOSCOPE	
			VERT.	HORIZ.
F TP1	F_c=10 KHz (Mod. ±7.5% with 100 Hz data signal)	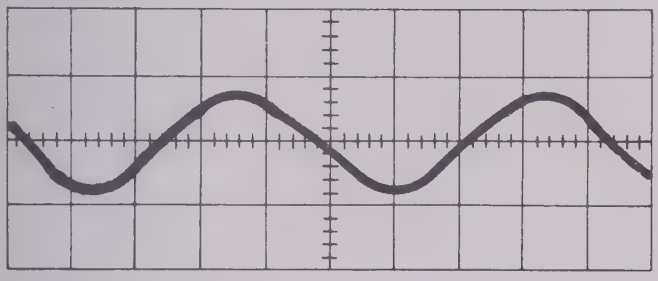	1V/Cm	2 milli-sec/Cm
ut 5TP1	F_c=10 KHz (Mod. ±7.5% with 100 Hz data signal)	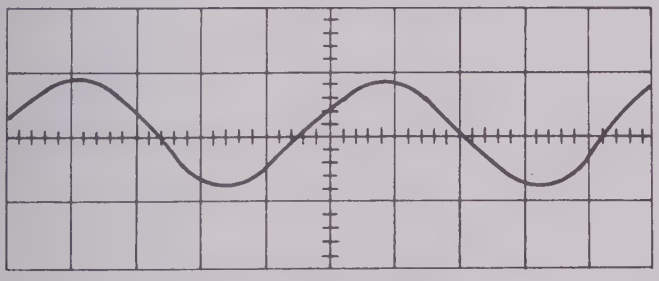	2V/Cm	2 milli-sec/Cm
ut TP2	F_c=10 KHz (Mod. ±7.5% with 100 Hz data signal)	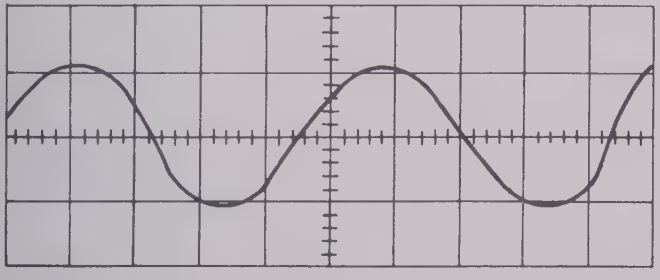	2V/Cm	2 milli-sec/Cm

Table 5-2. Transistor Voltages, BPIF #1 Printed Circuit Card (A2J1)

ANSISTOR	E	B	C
Q1	-1.24	-0.63	+14.4
Q2	-1.80	-1.25	+11.4
Q3	+14.6	+14.0	-0.48
Q4	+11.4	+10.8	-14.0
Q5	-18.2	-17.5	+15.2
Q6	-16.0	-15.5	-2.05
Q7	-0.52	-1.24	-18.1
Q8	-1.32	-2.02	-20.0
Q9	-0.78	-0.15	+15.0
Q10	-0.78	-0.20	+11.6
Q11	+11.6	+11.0	-0.10
Q12	-0.65	-0.10	+14.2
Q13	-14.4	-15.0	-0.78
Q14	-15.2	-14.6	-1.25
Q15	-0.70	-1.25	-19.8

ES:
Voltages taken with multiplex input grounded.
Switch settings as follows:
F_c - 100 KHz F_D - 7.5% Data cutoff 1.5 KHz

able 5-3. Transistor Voltages, Input Printed-Circuit Card (A2J2)

SISTOR	E	B	C
1	-0.82	-0.18	+14.5
2	-0.70	-0.08	+14.5
3	+0.55	+1.16	+8.75
4	-0.67	-0.08	+23.2
5	-1.47	-0.84	+11.5
6	-1.37	-0.72	+11.6
7	-0.07	+0.55	+23.0
8	+11.5	+10.9	-13.9
9	+11.6	+10.9	-14.1
10	-15.5	-14.8	-0.66
11	-14.6	-13.9	-1.46
12	-14.6	-14.0	-1.36
13	-1.26	-0.65	+14.5
14	-1.70	-1.25	+14.6
15	+14.7	+14.0	+1.28
16	-0.16	+0.43	+14.5
17	-2.55	-1.85	+11.1
18	-16.8	-15.8	+14.0
19	-0.83	-0.18	+11.6
20	+10.5	+11.0	+14.6
21	+1.28	+0.64	-16.8
22	+11.6	+11.0	-14.0
23	+0.60	-0.03	-20.0
24	-14.6	-14.0	-0.83
25	0.00	+0.7	+0.10
26	0.00	+0.06	+0.45
27	0.00	+0.70	+0.10

:

. Voltages taken with multiplex input grounded.
. Switch settings as follows:

F_C - 100 KHz F_D - 7.5% Data cutoff 1.5 KHz

le 5-4. Transistor Voltages, BPIF #2 Printed-Circuit Card (A2J3)

SISTOR	E	B	C
	+0.66	+1.26	+14.5
	0.00	+6.30	+11.5
	+14.4	+13.8	+1.40
	+11.5	+10.9	-14.0
	-16.8	-16.0	+13.8
	-14.6	-14.0	0.00
	+1.40	+0.74	-16.8
	+0.66	+0.04	-19.5
	+0.78	+1.39	+14.6
	+0.78	+1.40	+18.6
	+18.6	+18.0	+4.15
	+3.60	+4.15	+14.4
	-15.0	-14.4	+0.78
	-15.0	-14.4	+2.95
	+3.50	+2.90	-19.0

Voltages taken with multiplex input grounded.
Switch settings as follows:
F_c - 100 KHz F_D - 7.5% Data cutoff 1.5 KHz

able 5-5. Transistor Voltages, TSC Printed-Circuit Card (A2J4)

SISTOR	E	B	C
	+20.5	+20.0	-0.62
	+7.60	+8.20	+23.2
	-0.60	-0.03	+20.0
	+20.0	+19.2	+8.70
	+7.5	+8.1	+23.0
	-0.08	+0.54	+23.5
	-14.4	-13.8	-0.60
	-14.6	-14.0	+0.53
	-5.7	-5.00	-3.10
0	+13.8	+13.1	-0.64
1	-0.64	-0.06	+13.1
2	-2.45	-3.15	-5.70
3	+7.80	+7.00	-0.64
4	-0.64	-0.08	+7.00

:

. Voltages taken with multiplex input grounded.

Switch settings as follows:

F_C - 100 KHz F_D - 7.5% Data cutoff 1.5 KHz

able 5-6. Transistor Voltages, Limiter Printed-Circuit Card (A2J6)

NSISTOR	E	B	C
Q1	-0.71	-0.08	+13.2
Q2	-1.32	-0.71	+14.0
Q3	-0.71	-0.08	+13.9
Q4	-1.34	-0.71	+14.8
Q5	-0.72	-0.09	+13.8
Q6	-1.32	-0.72	+14.9
Q7	-0.75	-0.07	+7.4
Q8	-0.90	-0.75	+7.4
Q9	-0.90	-0.95	+8.6
Q10	-0.96	-0.25	+7.4
Q11	+6.80	+7.40	+14.0
Q12	+7.90	+8.60	+14.0
Q13	+20.0	+19.2	+15.2
Q14 (Left)	+2.5	+3.05	+15.5
Q14 (Right)	+2.5	+3.1	+14.4
Q16	+14.4	+15.0	+23.2
Q17	+15.0	+15.6	+23.0
Q18	+19.8	+19.0	+11.6
Q19	-0.60	-0.04	+10.0
Q20	+10.6	+9.8	-0.60
Q21	+13.4	+12.7	-0.60
Q22	-0.60	-0.03	+12.7
Q23	+11.0	+11.6	+23.2
Q24	+10.4	+11.0	+23.2
Q25	-14.0	-13.2	+3.70
Q26	+3.1	+3.7	+23.2
Q27	-1.30	-0.70	+14.8
Q28	0.00	-2.15	+18.5
Q29	+5.6	0.00	+1.10
Q30	+5.00	+5.60	+8.50
Q31	+5.00	+4.40	+23.2
Q32	-8.5	-11.0	+5.8
Q33	0.00	+0.76	+0.22
Q34	0.00	+0.76	+0.38

ES:

1. Voltages taken with multiplex input grounded.
2. Switch settings as follows:

   F_c - 100 KHz F_D - 7.5% Data cutoff 1.5 KHz

e 5-7. Transistor Voltages, Detector Printed-Circuit Card (A2J8)

NSISTOR	E	B	C
Q1	-3.50	-2.80	+6.00
Q2	+3.70	+4.40	+6.00
Q3	0.00	-0.10	+0.60
Q4	-4.80	-4.40	-2.80
Q5	-4.80	-5.90	+4.40
Q6	+5.60	+0.65	+14.0
Q7	+5.60	+6.30	+8.40
Q8	-8.40	-8.40	-4.60
Q9	-8.40	-4.80	-4.80
Q11	-3.50	-2.80	+6.00
Q12	+3.70	+4.40	+6.00
Q13	0.00	-0.10	+0.60
Q14	-4.80	-4.40	-2.80
Q15	-4.80	-5.90	+4.40
Q16	+5.60	+0.65	+14.0
Q17	+5.60	+6.30	+8.40
Q18	-8.40	-8.40	-4.60
Q19	-8.40	-4.80	-4.80

S:

1. Voltages taken with multiplex input grounded.
2. Switch settings as follows:
   F_C - 100 KHz F_D - 7.5% Data cutoff 1.5 KHz

5-8. Transistor Voltages, Voltage Switch Printed-Circuit Card (A2J10)

SISTOR	E	B	C
Q1	+8.40	+8.60	+13.4
Q2	0.00	-3.00	+8.60
Q3	+9.00	+11.7	-1.80
Q4	+6.00	+5.40	+2.20
Q5	+6.00	+5.60	-1.30
Q6 (A)	-0.62	-0.02	+16.00
Q6 (B)	-0.64	-0.02	+16.00
Q7	+15.2	+16.0	+22.5
Q8	-5.10	-4.80	+2.20
Q9	-5.10	-4.60	-1.30
Q10	0.00	+1.40	-4.10
Q11	-9.00	-9.60	-3.40
Q13	+15.5	+16.0	+23.0
Q14	+16.0	+15.2	0.00
Q15	+16.0	+15.2	+0.66
Q16	+0.07	+0.66	+23.0
Q17	-3.50	-4.10	-13.8
Q18	-8.50	-9.00	-4.80
Q19	-8.50	-9.00	-4.80
Q20	-8.40	-9.00	-4.80
Q21	-8.40	-9.00	-4.80
Q22	0.00	-0.62	-19.0
Q23	-0.88	-2.60	+23.0
Q24	+11.2	+11.8	+23.0
Q25	-0.40	+0.26	-0.26
Q26	-0.40	0.00	+14.3
Q27	-0.62	-0.02	+11.8
Q28	-0.60	-0.02	+14.3
Q29	+0.75	-5.20	-5.50
Q30	-5.20	-10.7	-7.00
Q31	+12.0	+6.20	+5.80
Q32	+6.20	+0.41	+0.02
Q33	0.00	+0.74	+0.13
Q34	0.00	-2.40	+1.22
Q35	0.00	-5.20	+1.22

:

. Voltages taken with multiplex input grounded.

. Switch settings as follows:

F_C - 100 KHz F_D - 7.5% Data cutoff 1.5 KHz

-9. Transistor Voltages, LPOF Single Pole Printed-Circuit Card (A2J11)

NSISTOR	E	B	C
Q1	-0.60	0.00	+14.6
Q2	-1.25	-0.61	+11.6
Q3	-15.2	-14.8	-1.25
Q4	+11.6	+11.0	-14.8

ES:

1. Voltages taken with multiplex input grounded.
2. Switch settings as follows:

F_c - 100 KHz F_D - 7.5% Data cutoff 1.5 KHz

le 5-10. Transistor Voltages, LPOF Pole Pair Printed-Circuit Card (A2J12, J13, and J14)

NSISTOR	E	B	C
Q1	-5.60	+0.06	+14.7
Q2	-1.20	-0.57	+13.0
Q3	-10.8	-10.2	-1.20
Q4	-0.57	-1.22	-20.0
Q5	+0.08	-0.56	-18.5
Q6	+10.6	+9.90	+0.08
Q7	-16.8	-16.0	-2.20
Q8	-1.50	-2.20	-18.5
Q9	-0.76	-0.13	+14.7
Q10	-1.38	-0.76	+13.0
Q11	-0.10	-0.76	-19.8
Q12	-0.10	-0.74	-16.8
Q13	+16.0	+15.2	-1.50
Q14	-10.8	-10.1	-1.38

ES:

1. Voltages taken with multiplex input grounded.
2. Switch settings as follows:

   F_C - 100 KHz F_D - 7.5% Data cutoff 1.5 KHz

e 5-11. Transistor Voltages, Output Printed-Circuit Card (A2J15)

SISTOR	E	B	C
1	+19.5	+18.5	+19.5
2	+19.5	+18.5	+19.5
3	+19.2	+18.6	-3.80
4	-4.45	-3.80	+14.5
5	+19.5	+18.5	+0.56
6	0.00	+0.56	+14.6
7	-6.60	-0.02	+19.2
8	-6.40	0.00	+14.6
9 (A)	-0.60	-0.04	+14.6
9 (B)	-0.59	-0.04	+19.5
10 (A)	-1.21	-0.60	+14.6
10 (B)	-1.20	-0.60	+19.5
11	-4.50	-5.50	-19.1
12	-16.0	-15.2	-1.38
13	-16.0	-15.2	-0.70
14	-0.06	-0.70	-19.3
15	-16.0	-15.2	-5.2
16	+15.0	+15.6	+23.0
17	+14.0	+14.7	+23.0
18	+14.8	+15.4	+23.0
19	+15.6	+15.0	+0.56
20	+15.5	+14.8	0.00
21	+14.0	+14.6	+23.0
22 (A)	-5.60	0.00	+15.6
22 (B)	-5.60	0.00	+15.2
23	-5.60	+0.02	+14.6
24	-5.60	0.00	+14.6
25	-0.02	+5.60	+14.6
26	-1.20	-0.56	+14.6
27	-1.20	-0.56	+14.6
28	+14.6	+14.0	0.00
29	+14.6	+14.0	+1.38
30	+0.74	+1.38	+22.0
31	+0.11	+0.74	+18.0
32	+0.12	+0.74	+18.0
33	+0.36	-0.70	-19.2
34	-16.1	-15.4	-1.30
35	+0.04	-0.62	-19.0
36	+0.04	-0.62	-19.0
37	-0.63	-1.30	-18.6

S:

1. Voltages taken with multiplex input grounded.
2. Switch settings as follows:

F_C - 100 KHz F_D - 7.5% Data cutoff 1.5 KHz

5-11. Transistor Voltages, Regulator Printed-Circuit Card (A2J16)

	E	B	C
Q1	-32.2	+31.8	+25.0
Q2	-24.2	+25.0	-34.5
Q3	-15.1	+15.7	+23.6
Q4	-17.8	-17.1	+13.5
Q5	-13.0	+13.6	-22.0
Q7	-0.50	0.00	+25.0
Q8	-11.1	-11.7	+25.0
Q9	-8.80	-9.20	+11.7
Q10	-8.80	-9.20	+9.90
Q11	+13.0	+13.6	+15.8
Q12	+8.40	-9.00	+13.7
Q13	-8.40	-9.10	+8.50
Q14	-0.80	-0.02	-12.6
Q15	-0.10	-0.15	+11.7
Q16	-6.41	-6.93	-10.1
Q17	-0.14	-0.02	-8.5
Q20	-6.11	-6.90	+11.1
Q21	-21.1	-21.5	-30.0
Q22	-7.60	-7.60	+12.0
Q23	-12.5	-11.8	+7.60
Q24	-27.8	-27.0	-21.5
Q25	-9.30	-10.0	-14.6
Q26	-16.6	-15.9	-9.90
Q27	-8.60	-9.30	-14.6
Q28	-0.57	+0.04	+7.60
Q29	-5.70	-0.02	-6.30
Q30	+0.35	-0.02	-21.5
Q31	-11.0	-11.7	-21.5
Q32	-8.40	-9.10	-11.7
Q33	-8.40	-9.10	-8.5

13. Connection List, Model 4140 Programmable Tunable Discriminator

M	TO	SIGNAL
1	A2J2-31	+24V
2	A2J3-2	100 Hz-
2	A2J8-17	1 KHz
3	A2J10-29	7-1/2%
3	A2J2-5	7-1/2%
4	A2J10-30	15%
4	A2J2-6	15%
5	A2J2-8	40%
7	A2J3-7	10 KHz-
7	A2J8-15	100 KHz
9	A2J2-25	Sect.(1) C IN
10	A2J3-10	1 KHz-
10	A2J8-16	10 KHz
11	A2J10-31	30%
11	A2J2-7	30%
12	A2J2-26	IN
13	A2J2-2	OUT
14	A2J2-23	-20
15	A2J2-21	+12V
16	A2J2-27	+15V
17	A2J2-15	100 KHz-
17	A2J8-9	1.5 MHz
18	A2J2-24	Sect.(1) C OUT
19	A2J2-10	GRD
20	A2J3-20	3-1
20	A2J8-29	3-1
21	A2J2-17	1 MHz
21	A2J8-24	1 MHz
22	A2J3-22	1-1
22	A2J8-21	1-1
23	A2J3-23	1-4
23	A2J8-19	1-4
24	A2J3-24	2-1
24	A2J8-32	2-1
25	A2J3-25	2-4
25	A2J8-23	2-4
26	A2J3-26	3-4
26	A2J8-27	3-4
27	A2J3-27	3-8
27	A2J8-26	3-8
28	A2J3-28	3-2
28	A2J8-28	3-2
29	A2J3-29	2-8
29	A2J8-22	2-8

FROM	TO	SIGNAL
A2J1-30	A2J3-30	2-2
A2J1-30	A2J8-30	2-2
A2J1-31	A2J2-14	1-8
A2J1-31	A2J8-18	1-8
A2J1-32	A2J3-32	1-2
A2J1-32	A2J8-20	1-2
A2J2-1	A2J3-18	Sect.(2) C IN
A2J2-3	A2J3-12	Sect.(2) OUT
A2J2-4	A2J3-9	Sect.(2) C OUT
A2J2-5	A2J3-11	7-1/2%
A2J2-6	A2J3-3	15%
A2J2-7	A2J3-4	30%
*A2J2-8	A2J3-5	40%
A2J2-9	A1DS12-2	OOR
A2J2-9	A2J10-27	OOR
* A2J2-10	A2J3-19	GRD
A2J2-13	A1TP3	BP OUT
A2J2-14	A2J3-31	BP 1-8
A2J2-15	A2J3-17	BP 1 MHz
A2J2-17	A2J3-21	BP 1 MHz
A2J2-18	A1S1G-14	LP 100 KHz
A2J2-19	A2J11-26	LP 1-8
A2J2-20	A2J11-9	LP 1-4
A2J2-21	A2J3-15	+12V
A2J2-22	A1TP4	MPX IN
A2J2-23	A2J3-14	-20
A2J2-27	A2J3-16	+15V
A2J2-28	A1M2	IN MTR (+)
A2J2-29	A2J6-20	IN MTR INPUT
A2J2-30	A1M2	IN MTR (-)
A2J2-31	A2J3-1	+24V
A2J2-32	A3J3-1	MPX IN
A2J3-1	A2J4-1	+24V
A2J3-2	A2J4-4	100 Hz- 1 KHz

able 5-13A for 4140-M5 wiring.

Table 5-13 (Cont'd.). Connection List, Model 4140
Programmable Tunable Discriminator

M	TO	SIGNAL
	A2J4-7	.5%
	A2J4-10	10%
	A2J10-12	40%
	A2J4-6	10 KHz-100 KHz
0	A2J4-5	1 KHz-10 KHz
1	A2J4-9	7-1/2%
1	A2J6-2	OUT
4	A2J4-2	-20V
5	A2J4-13	+12V
6	A2J4-3	+15V
7	A2J4-8	100 KHz-1.5 MHz
9	A2J4-16	GRD
0	A2J4-28	3-1
21	A2J4-19	1 MHz
22	A2J4-14	1-1
23	A2J4-12	1-4
24	A2J4-21	2-1
25	A2J4-25	2-4
26	A2J4-24	3-4
27	A2J4-22	3-8
28	A2J4-26	3-2
29	A2J4-27	2-8
30	A2J4-23	2-2
31	A2J4-17	1-8
32	A2J4-11	1-2
1	A2J6-8	-24V
2	A2J6-29	-20V
3	A2J6-30	+15V
13	A2J8-25	+12V
15	A3J2-1	TSC IN
16	A2J5-16	GRD
20	A2J6-6	TSC OUT
29	A2J4-30	BAL OUT
30	A2J6-5	BAL OUT
31	A3J8	SIG GRD
32	A3S1-C	DEV SEN
1	A2J5-1	GRD

FROM	TO	SIGNAL
A2J6-1	A2J8-1	GRD
A2J6-3	A2J8-11	+15V REG
A2J6-4	A1R2-1	BAL POT
A2J6-8	A2J6-11	+24V
* A2J6-19	A1R2-1	BAL POT
A2J6-24	A2J5-24	GRD
A2J6-25	A2J8-4	-8V
A2J6-26	A1DS11-2	ZERO SIG LMP
A2J6-27	A2J10-7	ZERO SIG RLY
A2J6-28	A2J8-7	SCH OUT(2)
A2J6-29	A2J8-11	-20V
A2J6-30	A2J8-12	+15V
A2J6-31	A2J8-8	+24V
A2J6-32	A2J8-2	SCH OUT(1)
A2J8-1	A2J8-14	GRD
A2J8-3	A2J10-8	1 OUT
A2J8-4	A2J10-16	-8V
A2J8-5	A2J10-20	+6V
A2J8-6	A2J10-6	2 OUT
A2J8-8	A2J10-1	+24V
A2J8-9	A1S1F-14	
A2J8-10	A2J10-18	$\overline{1}$ OUT
A2J8-11	A2J10-19	-20V
A2J8-12	A2J10-28	+15V
A2J8-13	A2J10-13	$\overline{1}$ OUT
A2J8-14	A2J10-9	
A2J8-15	A1S1F-11	10 KHz-100 KHz
A2J8-16	A1S1F-8	1 KHz-10 KHz
A2J8-17	A1S1F-5	100 Hz-1 KHz
A2J8-18	A1S1D-17	1-8
A2J8-19	A1S1D-14	1-4
A2J8-20	A1S1D-11	1-2
A2J8-21	A1S1D-8	1-1
A2J8-22	A1S1D-5	2-8
A2J8-23	A1S1D-2	2-4

ble 5-13A for 4140-M5 wiring.

Table 5-13 (Cont'd.). Connection List, Model 4140
Programmable Tunable Discriminator

M	TO	SIGNAL
14	A1S1E-2	1 MHz
19	A2J10-13	+12V
1+	A1S1C-11	3-8
17	A1S1C-8	3-4
18	A1S1C-5	3-2
19	A1S1C-2	3-1
10	A1S1C-17	2-2
12	A1S1C-14	2-1
-4	A2J12-2	-24V
-1	A2J11-31	DATA OUT
-1	A2J10-27	CLAMP RELAY
-1	A1DS12-2	CWP
-4	A2J15-4	- REF
-3	A2J15-3	- REF
-7	A2J15-26	CLAMP RELAY
-9	A2J10-10	GRD
-10	A2J10-11	GRD
-12	A2J10-11	GRD
-13	A2J11-14	GRD
-14	A2J16-4	-6V
-16	A2J10-25	-12V
-20	A2J16-c	-6V
-21	A3S1-1	-SENSE
-22	A2J15-27	EE MTR.
-11	A1M1-	EE MTR.
-11	A2J15-24	EE MTR.
-19	A1M1-	EE MTR.
-24	A3S1-2	-SENSE
-13	A2J11-23	+12V
-11	A2J11-22	-20V
-26	A2J11-24	-15V
-27	A1S1E-5	7-1/2%
-31	A2J15-19	15%
-11	A2J15-9	30%
-32	A2J15-6	45%
-4	A2J12-1	1 Hz - 10 Hz
-3	A2J12-3	10 Hz - 1 KHz
-2	A2J12-2	10 Hz - 100 Hz

FROM	TO	SIGNAL
A2J11-6	A2J12-17	2-1
A2J11-9	A2J11-19	1-4
A2J11-10	A2J12-21	1-1
A2J10-12	A2J12-4	1 KHz - 10 KHz
A2J11-14	A2J11-[illegible]	GRD
A1J11-15	A2J12-7	10 KHz - 100 KHz
A1J11-16	A2J12-8	CA
A2J11-17	A2J12-6	CD
A2J11-18	A2J12-32	OUT
A2J11-19	A2J12-31	2-4
A2J11-20	A2J12-29	3-1
A2J11-21	A2J12-27	3-4
A2J11-22	A2J12-11	-20V
A2J11-23	A2J12-5	+12V
A2J11-24	A2J12-22	+15V
A2J11-25	A2J12-20	1-2
A2J11-26	A2J12-18	1-8
A2J11-27	A2J12-16	2-2
A2J11-28	A2J12-30	1-8
A2J11-29	A2J12-28	3-2
A2J11-30	A2J12-26	3-8
A2J11-32	A2J15-11	DC OUT
A1J12-1	A2J13-1	1 Hz - 10 Hz
A1J12-1	A2J13-2	10 Hz - 100 Hz
A2J12-3	A2J13-3	100 Hz - 1 KHz
A1J12-4	A2J13-4	1 KHz - 10 KHz
A1J12-5	A2J13-5	+12V
A2J12-6	A2J13-6	CD
A2J12-7	A2J13-7	10 KHz - 100 KHz
A2J12-8	A2J13-8	CA
A2J12-9	A2J13-9	-24V
A2J12-10	A2J13-10	GRD
A2J12-11	A2J13-11	-20V
A2J12-16	A2J13-16	2-2
A2J12-17	A2J13-17	2-1
A2J12-18	A2J13-18	1-8
A2J12-19	A2J13-19	1-4
A2J12-20	A2J13-20	1-2

Table 5-13A for 4141-M5 wiring.

Table 5-13 (Cont'd.). Connection List, Model 4140 Programmable Tunable Discriminator

OM	TO	SIGNAL
21	A2J13-21	1-1
22	A2J13-22	+15V
24	A2J13-32	OUT
26	A2J13-26	3-8
27	A2J13-27	3-4
28	A2J13-28	3-2
29	A2J13-29	3-1
30	A2J13-30	2-8
31	A2J13-31	2-4
1	A2J14-1	1 Hz-10 Hz
2	A2J14-2	10 Hz-100 Hz
3	A2J14-3	100 Hz-1 KHz
4	A2J14-4	1 KHz-10 KHz
5	A2J14-5	+12V
6	A2J14-6	CD
7	A2J14-7	10 KHz-100 KHz
8	A2J14-8	CA
9	A2J14-9	+24V
10	A2J14-10	GRD
11	A2J14-11	-20V
16	A2J14-16	2-2
17	A2J14-17	2-1
18	A2J14-18	1-8
19	A2J14-19	1-4
20	A2J14-20	1-2
21	A2J14-21	1-1
22	A2J14-22	+15V
24	A2J14-32	OUT
26	A2J14-26	3-8
27	A2J14-27	3-4
28	A2J14-28	3-2
29	A2J14-29	3-1
30	A2J14-30	2-8
31	A2J14-31	2-4
1	A1S1F-17	1 Hz-10 Hz
2	A1S1G-2	10 Hz-100 Hz

FROM	TO	SIGNAL
A2J14-3	A1S1G-5	100 Hz-1 KHz
A2J14-4	A1S1G-8	1 KHz-10 KHz
A2J14-5	A2J15-25	+12V
A2J14-6	A1S1E-17	CD
A2J14-7	A1S1G-11	10 KHz-100 KHz
A2J14-8	A1S1F-2	CA
A2J14-9	A2J15-6	+24V
A2J14-10	A2J15-20	GRD
A2J14-11	A2J15-7	-20V
A2J14-16	A1S1A-17	2-2
A2J14-17	A1S1A-14	2-1
A2J14-18	A1S1B-17	1-8
A2J14-19	A1S1B-14	1-4
A2J14-20	A1S1B-11	1-2
A2J14-21	A1S1B-8	1-1
A2J14-22	A2J15-14	+15V
A2J14-24	A2J15-1	OUT
A2J14-26	A1S1A-11	3-8
A2J14-27	A1S1A-8	3-4
A2J14-28	A1S1A-5	3-2
A2J14-29	A1S1A-2	3-1
A2J14-30	A1S1B-5	2-8
A2J14-31	A1S1B-2	2-4
A2J15-5	A2J16-31	HF OUT
A2J15-6	A2J16-14	+24V
A2J15-7	A2J16-5	-20V
*A2J15-8	A1S1E-14	40%
A2J15-9	A1S1E-11	30%
A2J15-10	A1S1E-8	15%
A2J15-12	A2J16-32	HF IN
A2J15-14	A2J16-11	+15V
A2J15-18	A1R1-3	BE VOLTS
A2J15-19	A2J15-20	GRD
A2J15-20	A2J16-20	GRD
A2J15-22	A1R1-2	BE VOLTS
A2J15-25	A2J16-30	+12V
A2J15-30	A4TB1Q1C	- LIMIT
A2J15-31	A4TB1Q2C	+ LIMIT
A2J15-32	A1TP2	DATA OUT

le 5-13A for 4140-M5 wiring.

Table 5-13 (Cont'd.). Connection List, Model 4140
Programmable Tunable Discriminator

OM	TO	SIGNAL
-32	A3J1-1	DATA OUT
-1	A4C3+	UNREG +24V
-3	A4Q2-B	+24V REG.
-5	A4Q1-E	-20V
-7	A4Q4-B	+15V REG.
-9	A4C1+	UNREG -20V
-11	A4Q4-E	+15V
-12	A4C2-	GRD
-13	A1S2-12	GRD
-13	A1S1G17	GRD
-14	A4Q2-E	+24V
-20	A4C1-	UNREG -20V
-24	A4Q1-B	-20V REG.
-25	A1S13-B	UNREG +12V
-25	A4C2-	UNREG +12V
-27	A4Q3-B	+12V REG.
-28	A4C2+	UNREG +12V
-28	A1S13-A	UNREG +12V
-29	A1DS12-1	+12V
-30	A4Q3-E	+12V

FROM	TO	SIGNAL

Table 5-13A. Model 4140-M5 Wiring Modifications
(Use this table with Table 5-13)

FROM	TO	SIGNAL
	ADDITIONS	
A2J2-11	A2J6-7	±40% BPIF BYPASS
A2J4-10	A2J10-31	30%
A2J6-9	A2J10-17	40%
A2J6-11	A2J8-25	+12 volts
A2J10-17	A2J15-2	40%
	DELETION	
A2J1-11	A2J10-31	30%
	CHANGES	
A2J1-5	A2J2-8	40%
A2J1-5	A2J2-8	20%
A2J2-8	A2J3-5	40%
A2J2-8	A2J3-5	20%
A2J3-4	A2J4-10	30%
A2J3-4	A1S1-H5	30%
A2J3-5	A2J10-32	40%
A2J3-5	A2J10-32	20%
A2J4-13	A2J8-25	+12 volts
A2J4-13	A2J6-11	+12 volts
A2J10-32	A2J15-8	40%
A2J10-32	A2J15-8	20%
A2J15-8	A1S1E14	40%
A2J15-8	A1S1E14	20%

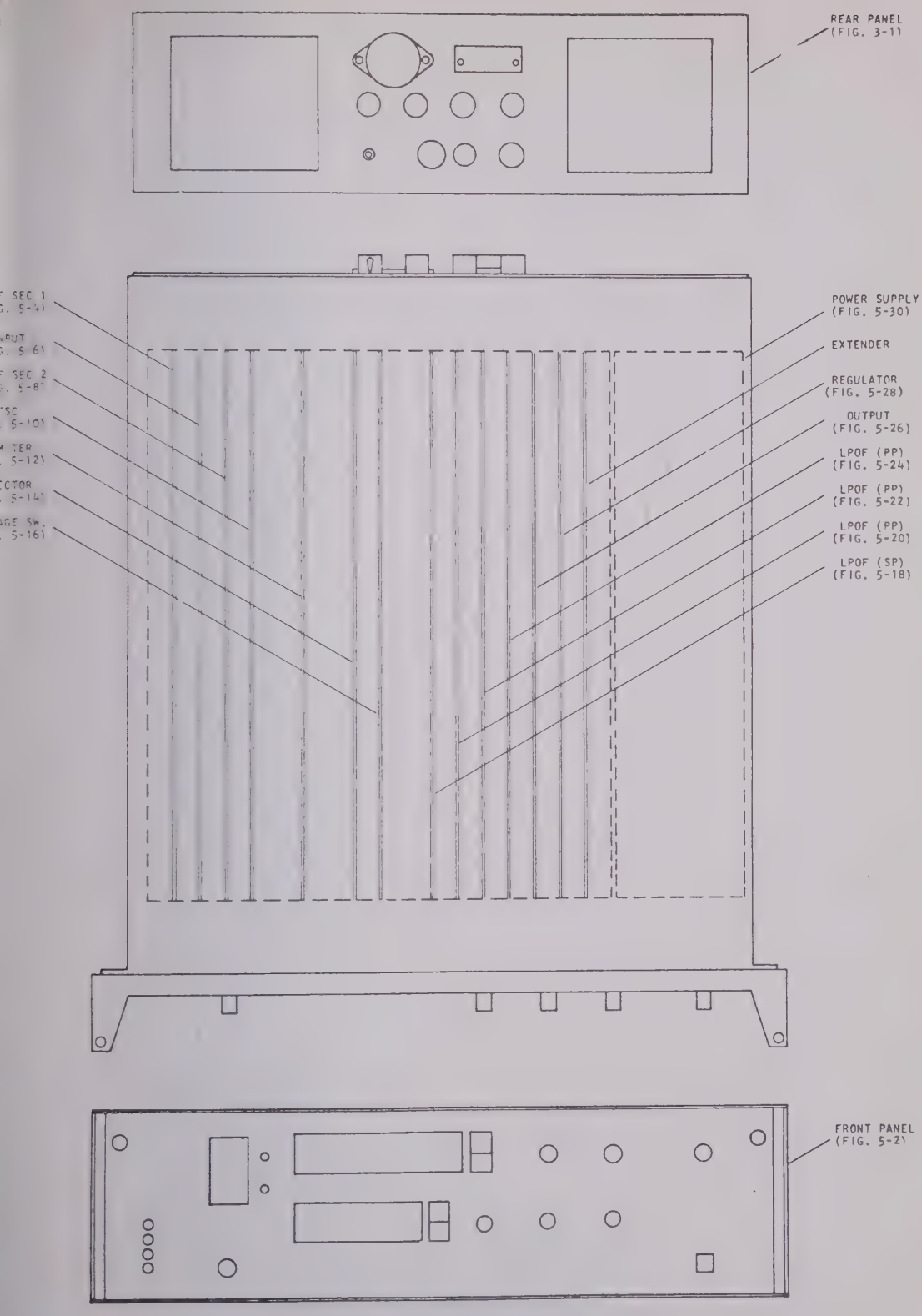

NOTE:

1. EMR DRAWING CONTROL NO. 4140-019.

Figure 5-1. Model 4140 Programmable Tunable Discriminator, Assembly Diagram

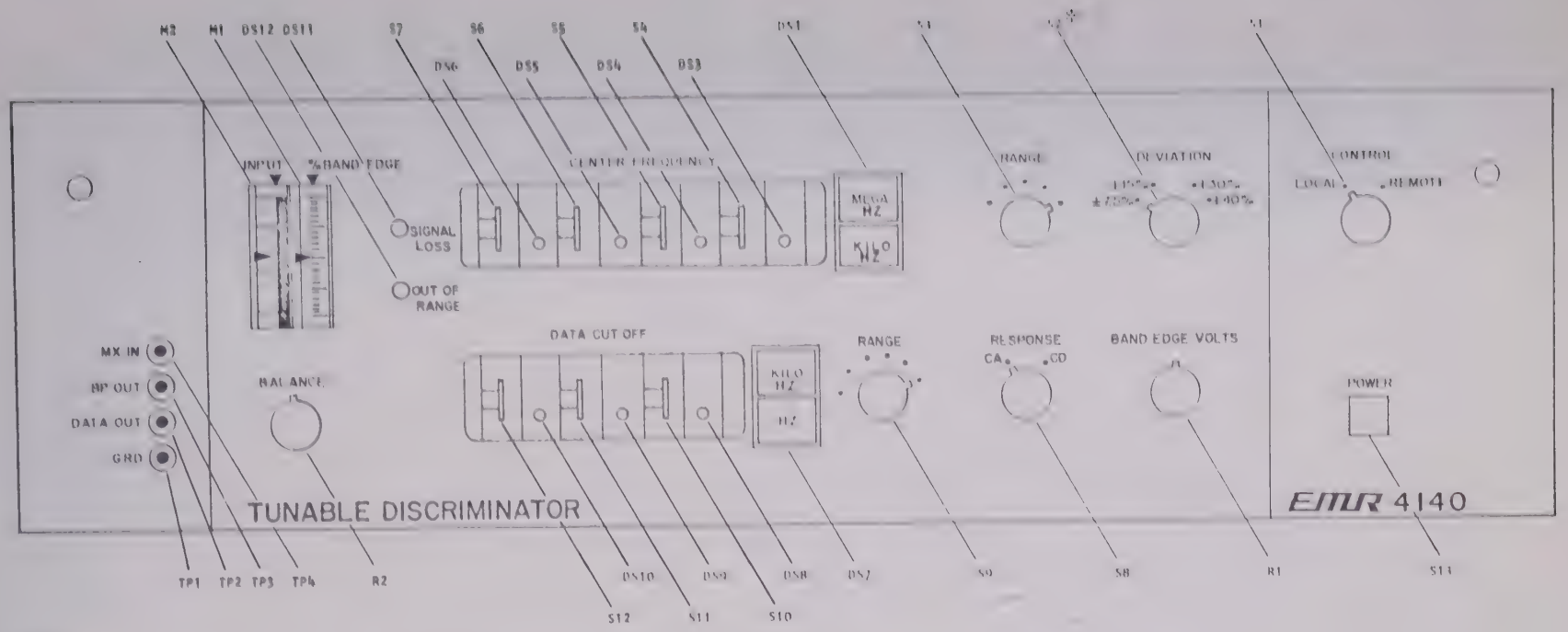

NOTE:

1. EMR DRAWING CONTROL NO. 4140-020.

* This switch has ±7.5%, ±15%, ±20%, ±30%, and ±40% positions on the 4140-M5.

Figure 5-2. Front-Panel Assembly A1, Location of Components

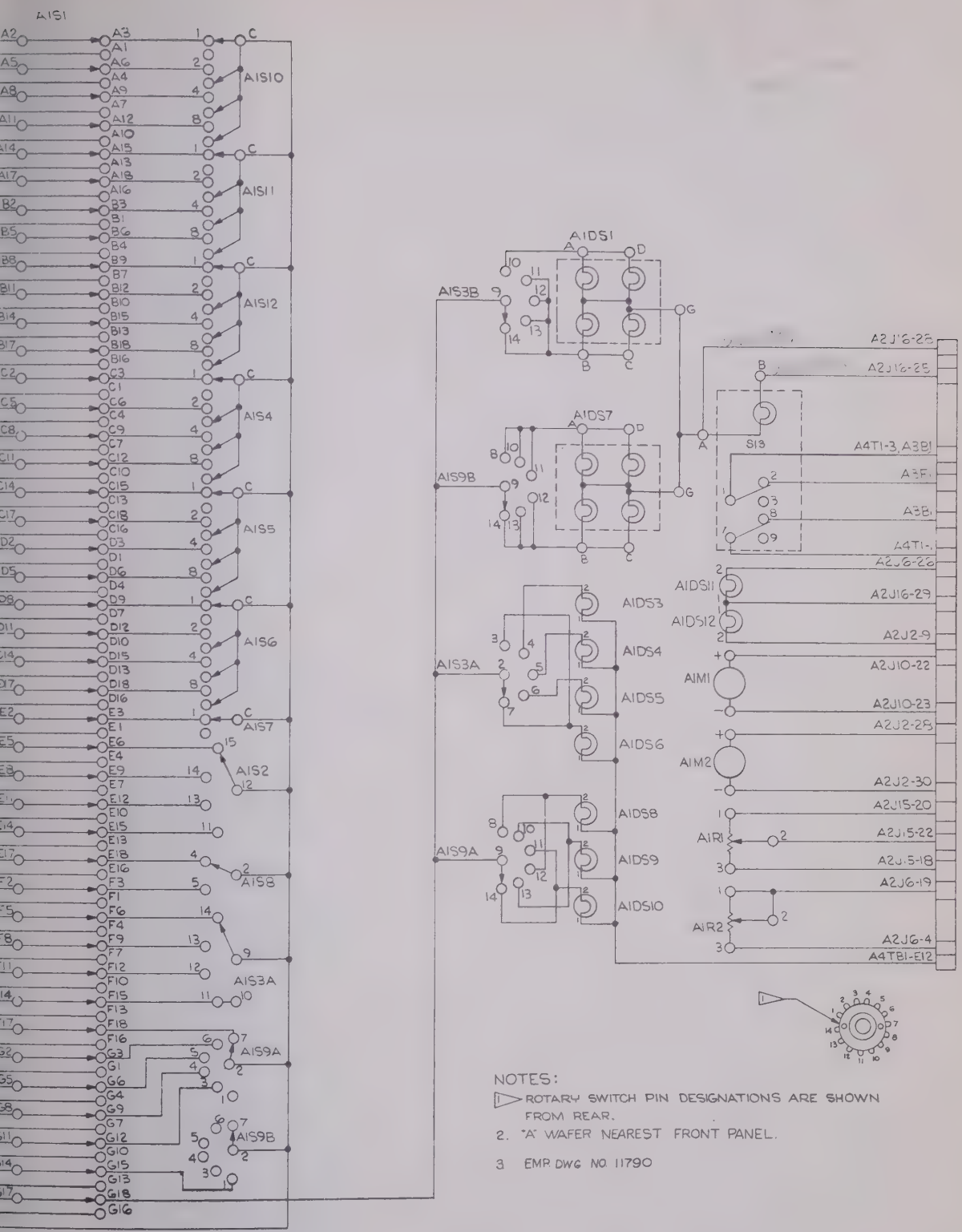

Figure 5-3. Front-Panel Assembly A1, Schematic Diagram

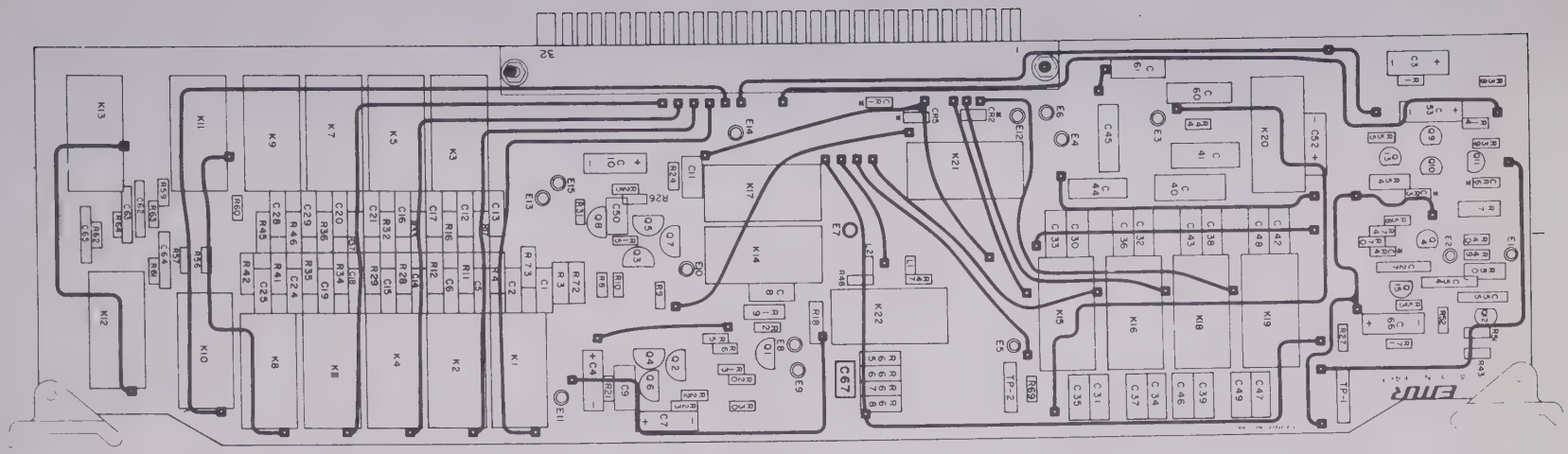

NOTE:
1. EMR DRAWING NO. 6463.

Figure 5-4. BPIF No. 1 Printed-Circuit Card A2J1, Location of Components

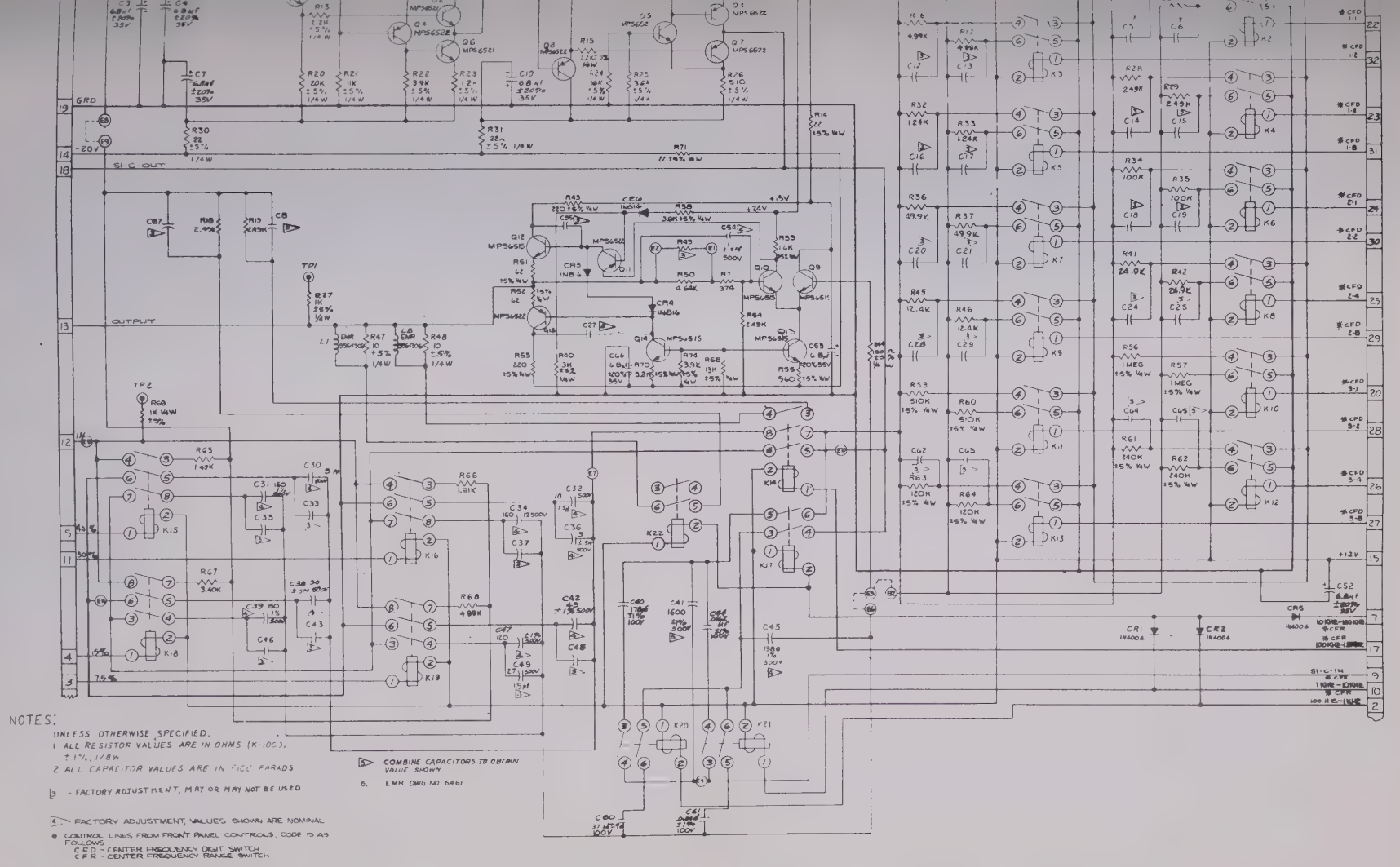

Figure 5-5. BPIF No. 1 Printed-Circuit Card A2J1, Schematic Diagram

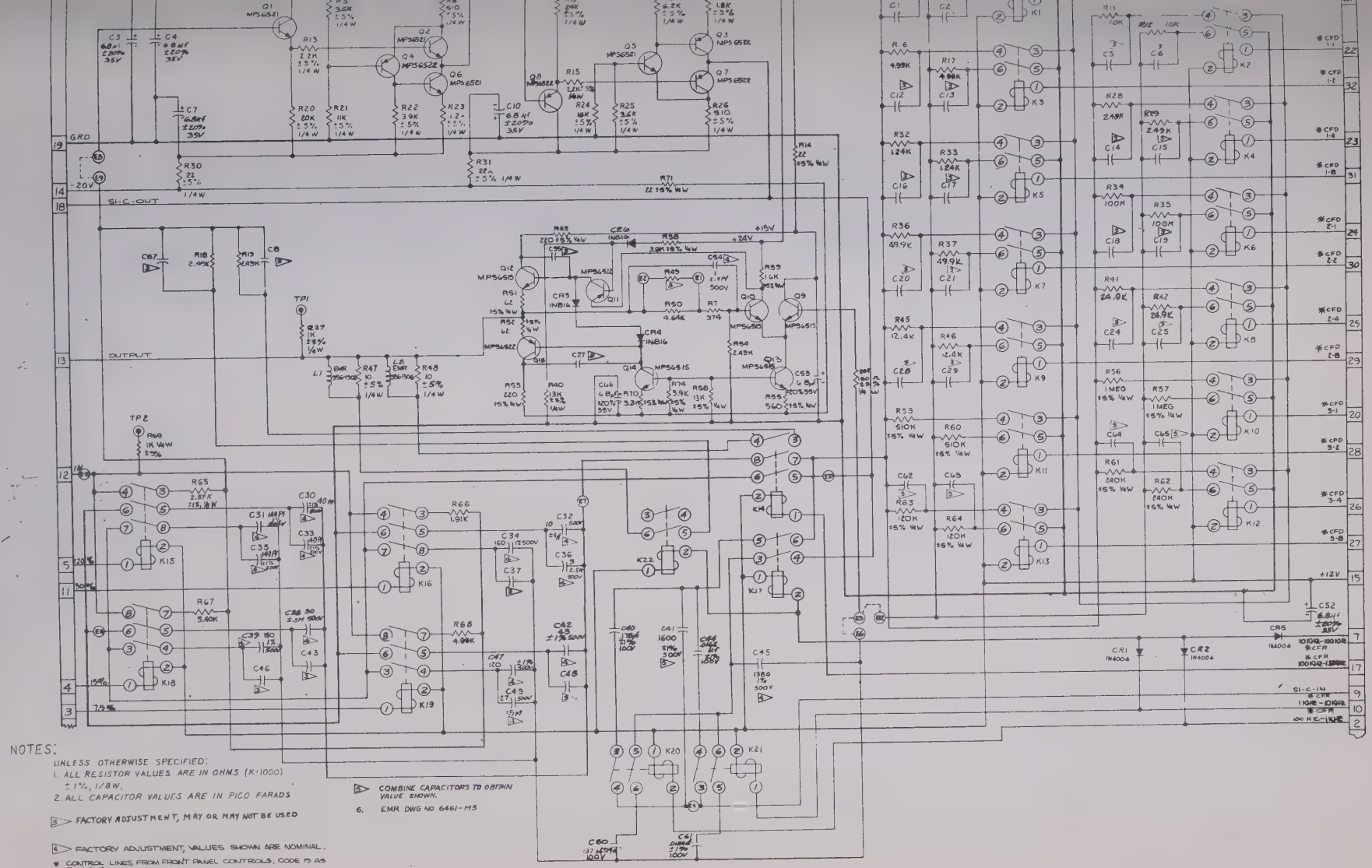

Figure 5-5A. BPIF No. 1 Printed-Circuit Card A2J1, Schematic Diagram For the 4140-M5

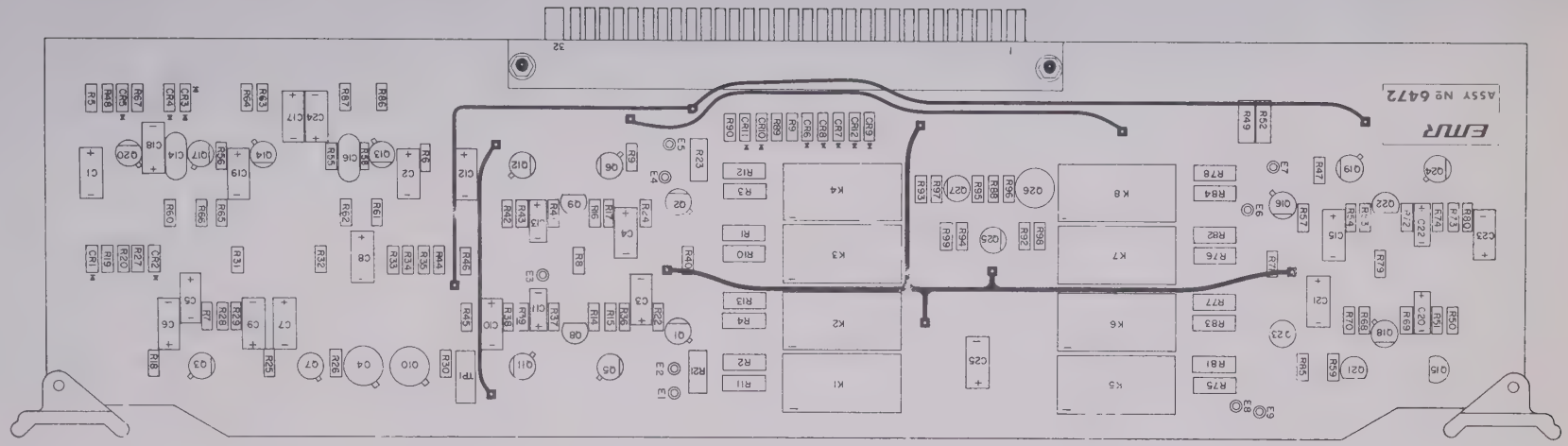

NOTE:
1. EMR DRAWING NO. 6472

Figure 5-6. Input Printed-Circuit Card A2J2, Location of Components

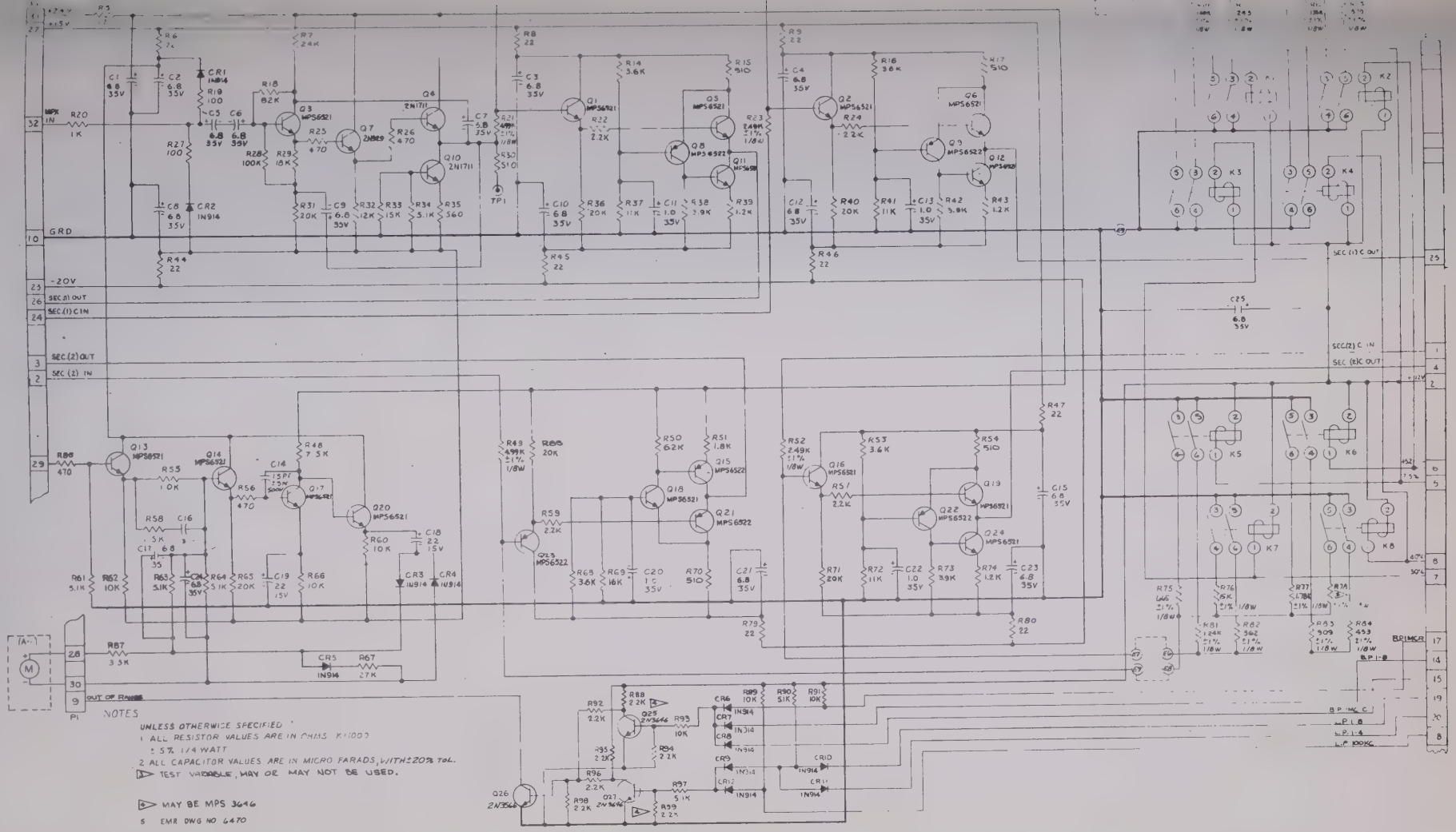

Figure 5-7. Input Printed-Circuit Card A2J2, Schematic Diagram

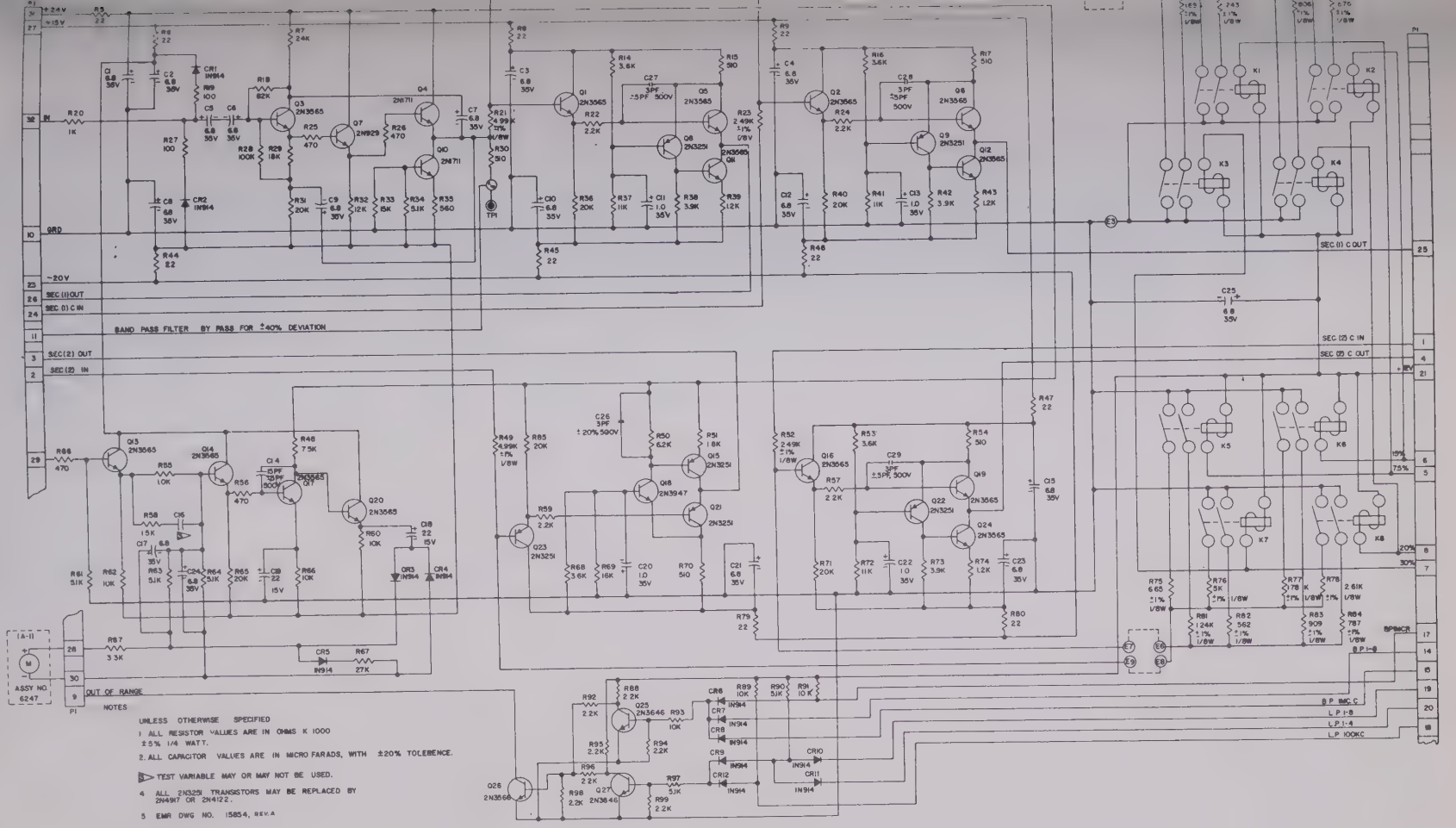

Figure 5-7A. Model 4140-M5 Input Card Schematic Diagram

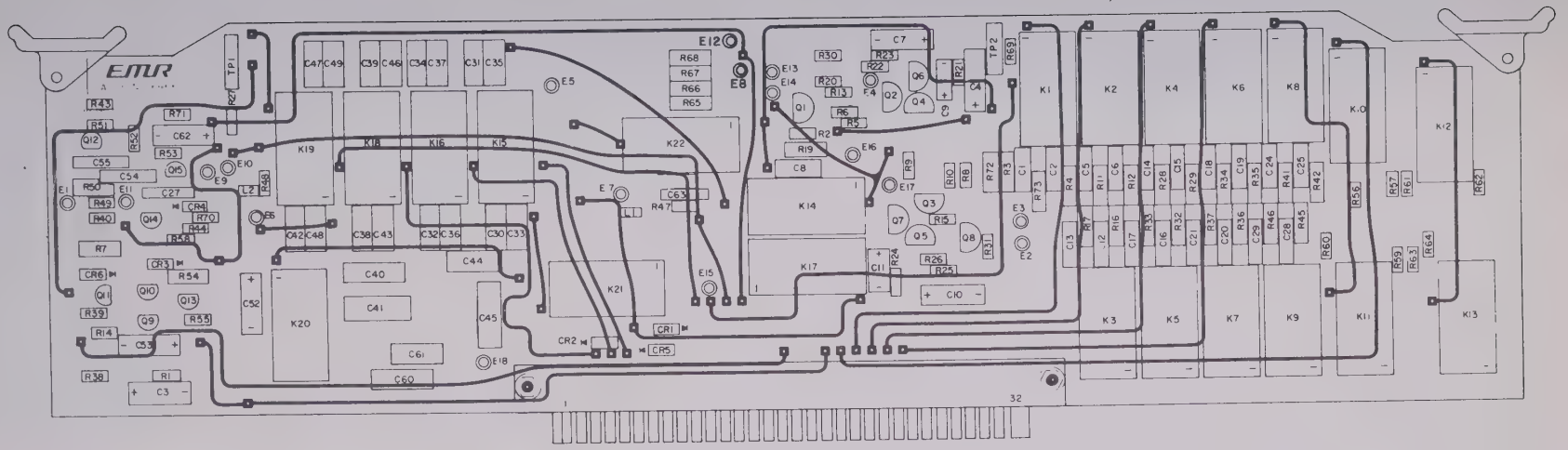

NOTE:
1. EMR DRAWING NO. 6466.

Figure 5-8. BPIF No. 2 Printed-Circuit Card A2J3, Location of Components

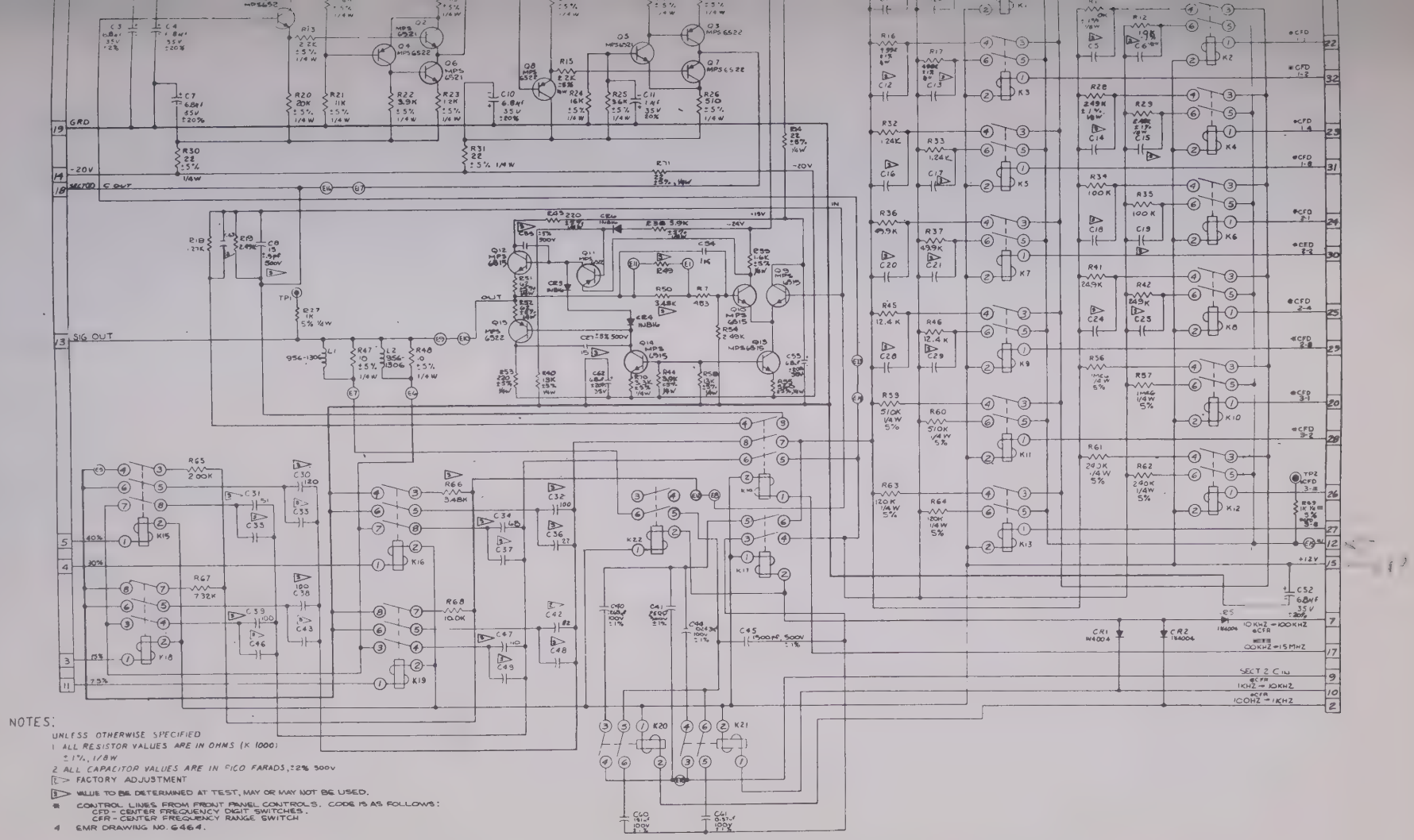

Figure 5-9. BPIF No. 2 Printed-Circuit Card A2J3, Schematic Diagram

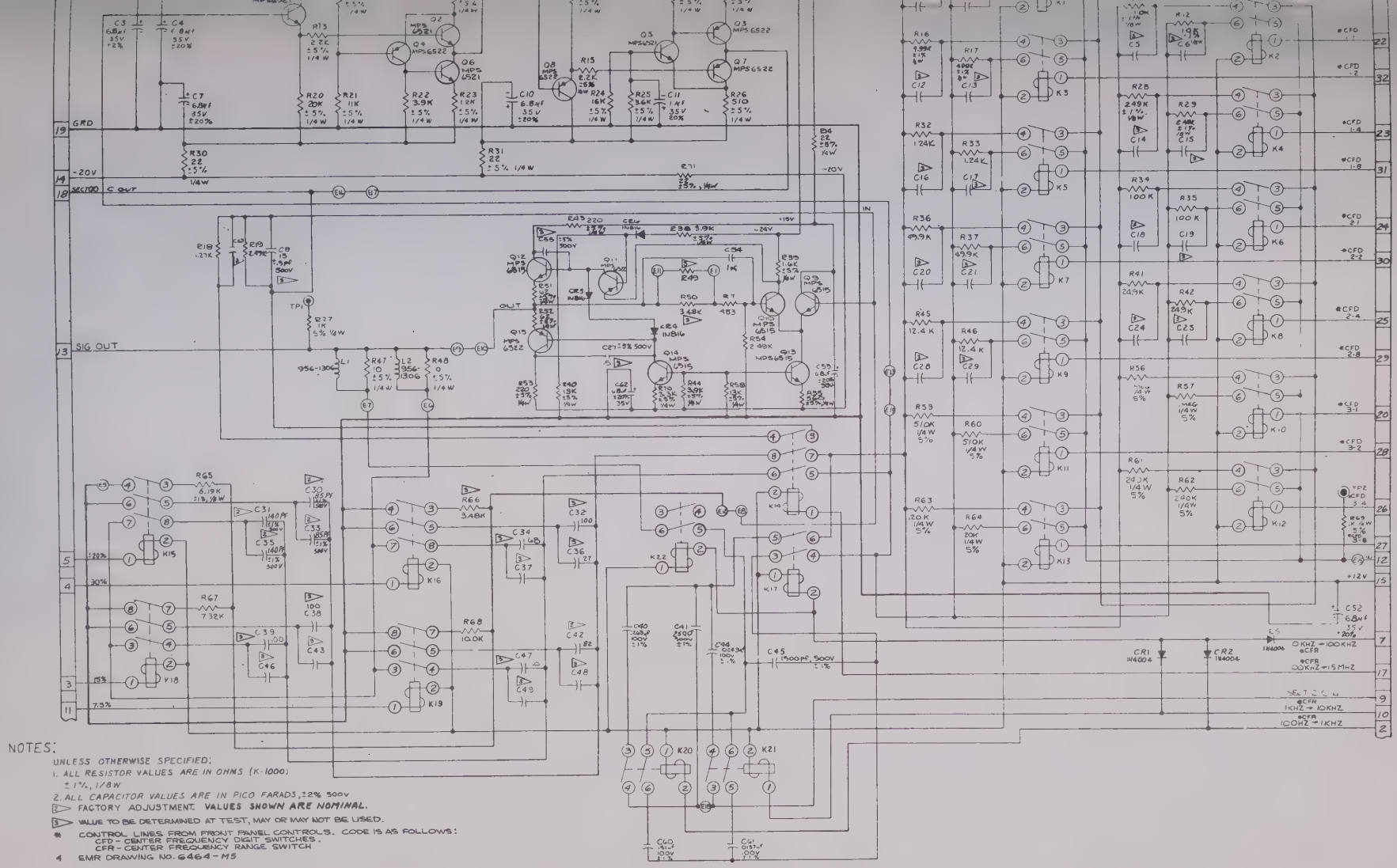

Figure 5-9A. BPIF No. 2 Printed-Circuit Card A2J3, Schematic Diagram For the 4140-M5

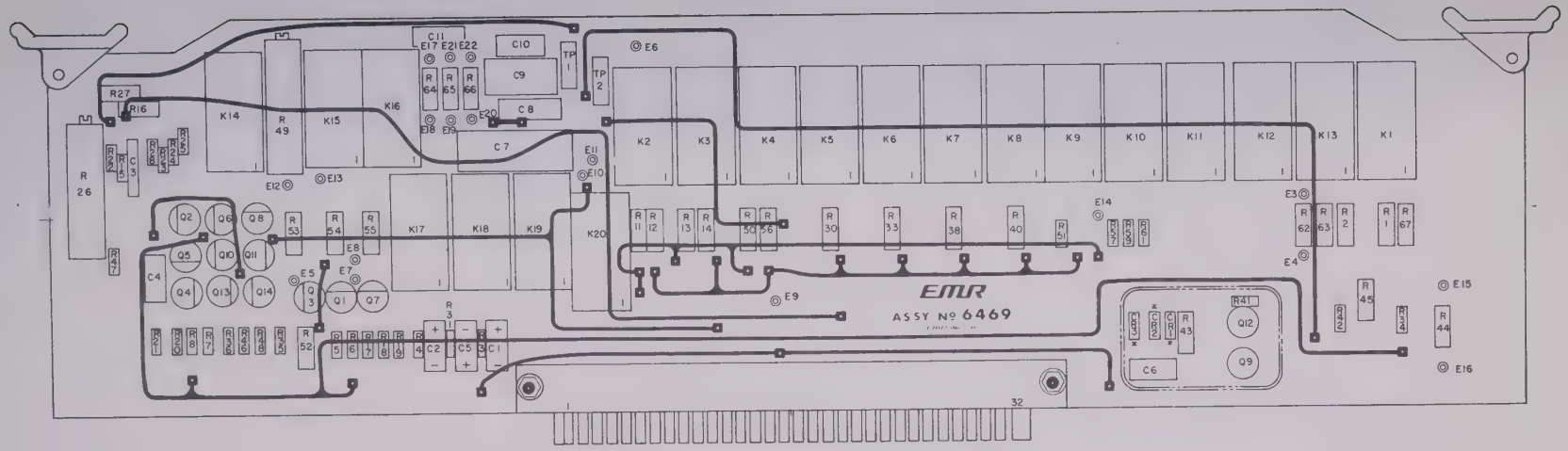

NOTE:
1. EMR DRAWING NO. 6469.

Figure 5-10. TSC Printed-Circuit Card A2J4, Location of Components

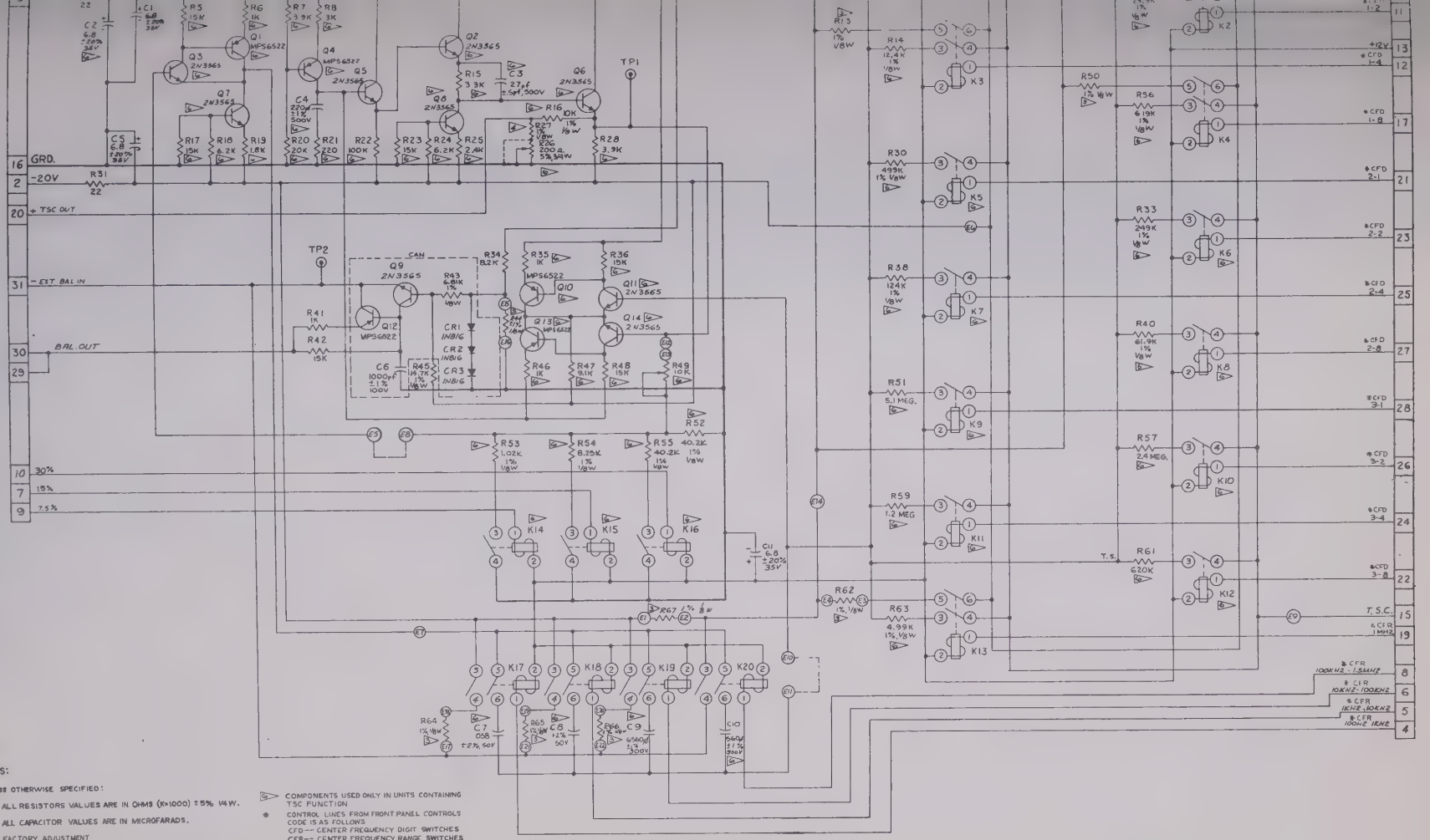

NOTES:

UNLESS OTHERWISE SPECIFIED:

1. ALL RESISTORS VALUES ARE IN OHMS (K=1000) ±5% ¼W.
2. ALL CAPACITOR VALUES ARE IN MICROFARADS.

FACTORY ADJUSTMENT

FOR UNITS WITH TSC: R27 IS 643Ω AND R26 IS USED. FOR UNITS WITHOUT TSC: R27 IS 1K, R26 IS REMOVED AND JUMPER IS INSTALLED (DOTTED LINE).

COMPONENTS USED ONLY IN UNITS CONTAINING TSC FUNCTION

* CONTROL LINES FROM FRONT PANEL CONTROLS CODE IS AS FOLLOWS
CFD-- CENTER FREQUENCY DIGIT SWITCHES
CFR-- CENTER FREQUENCY RANGE SWITCHES

7. EMR DWG NO. 6467.

Figure 5-11. TSC Printed-Circuit Card A2J4, Schematic Diagram

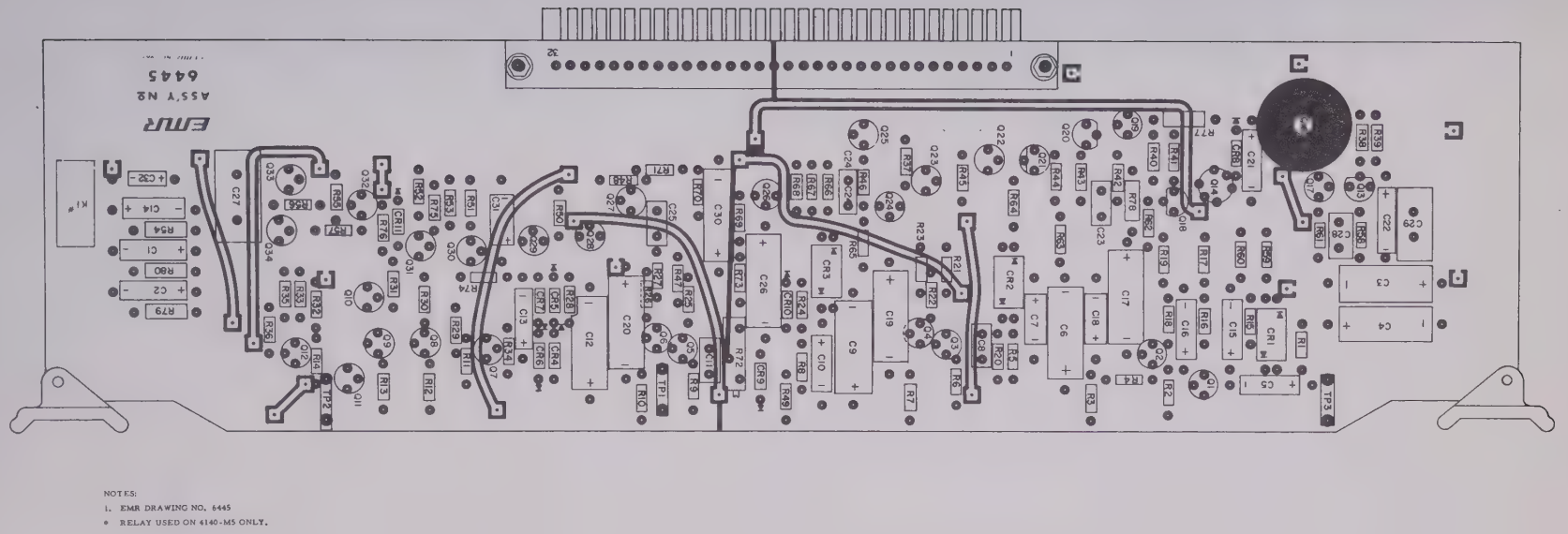

Figure 5-12. Limiter Printed-Circuit Card A2J6, Location of Components

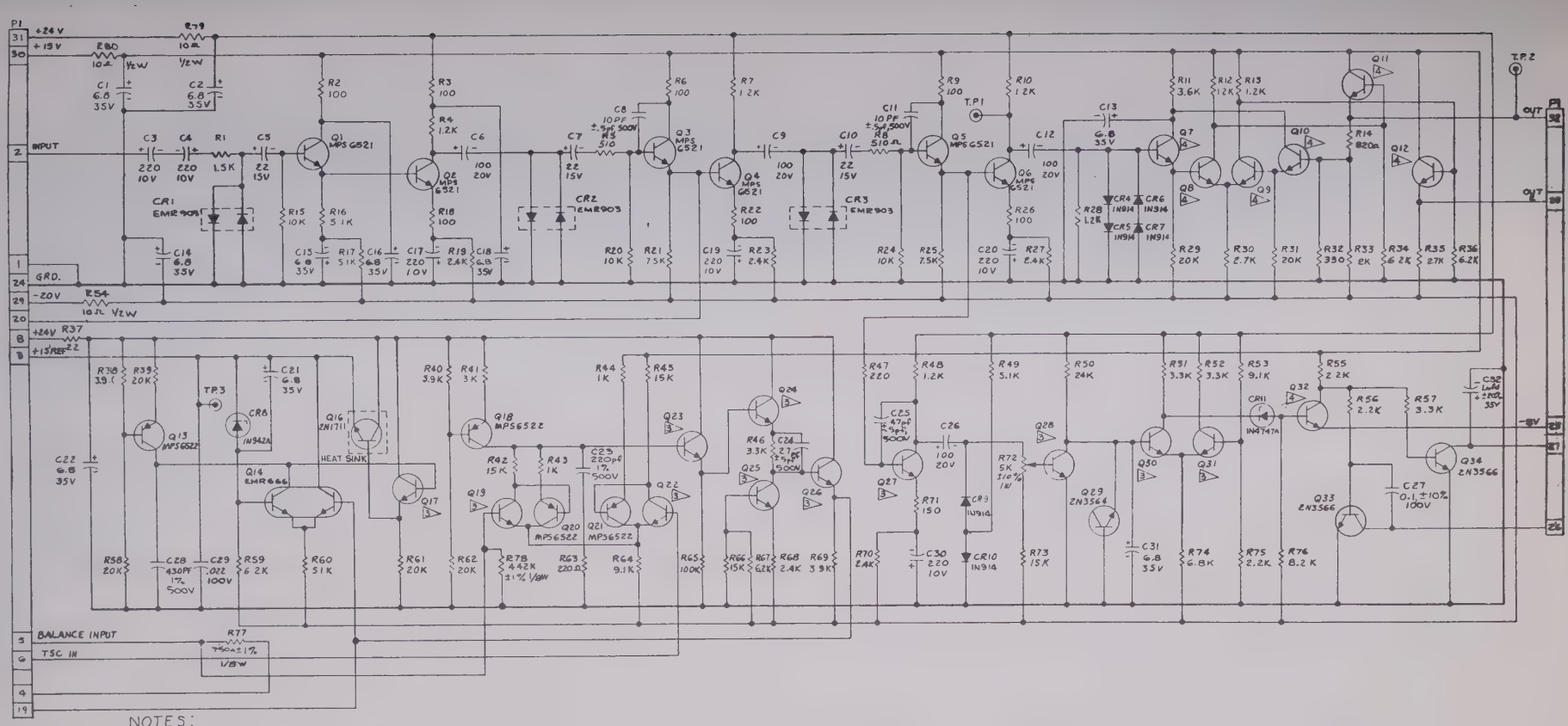

Figure 5-13. Limiter Printed-Circuit Card A2J6, Schematic Diagram

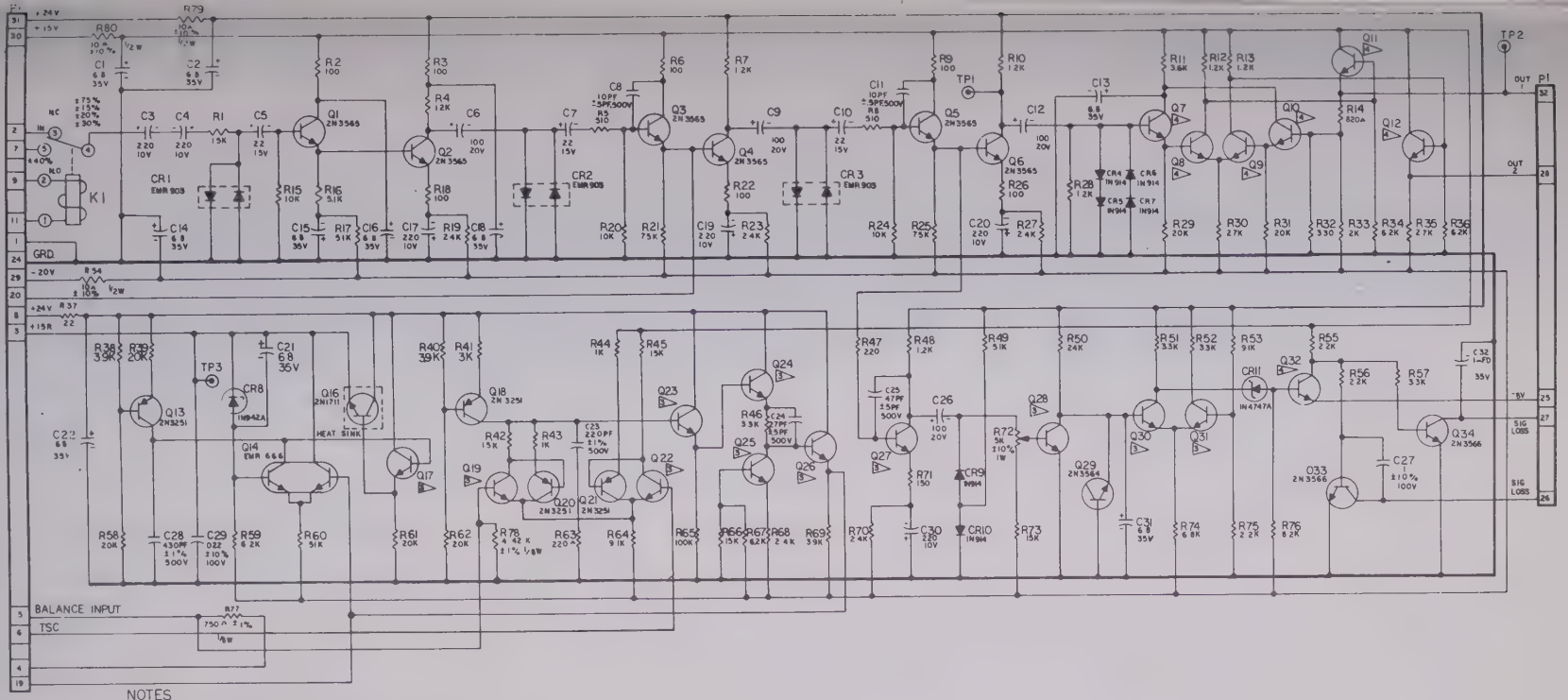

Figure 5-13A. Model 4140-M5 Limiter Card, Schematic Diagram

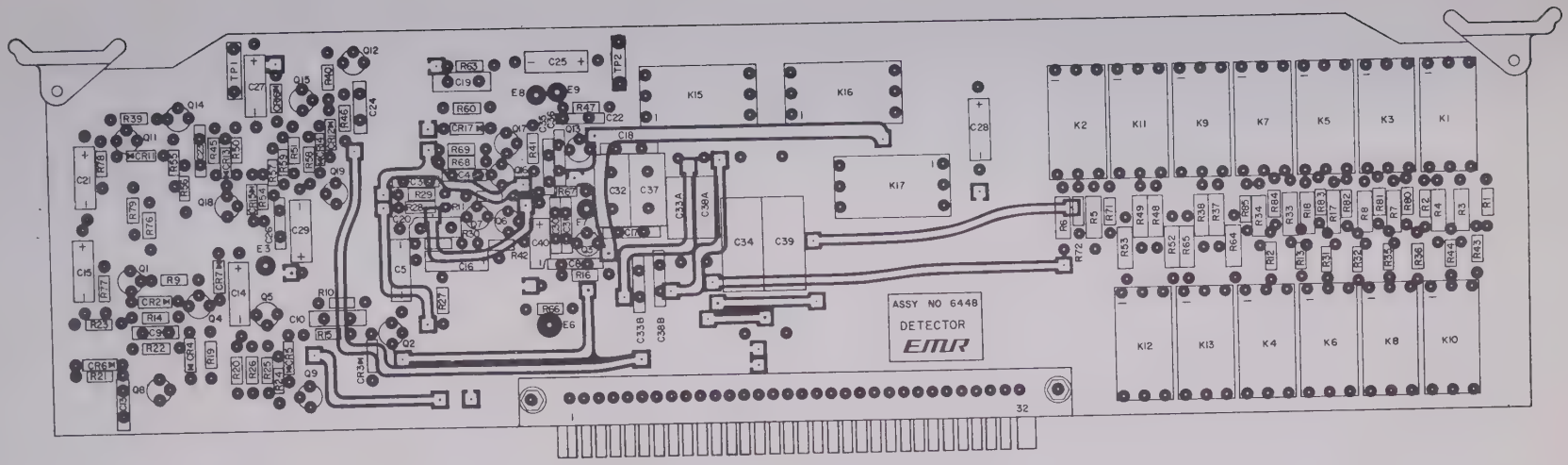

NOTE:
1. EMR DRAWING NO. 6448.

Figure 5-14. Detector Printed-Circuit Card A2J8, Location of Components

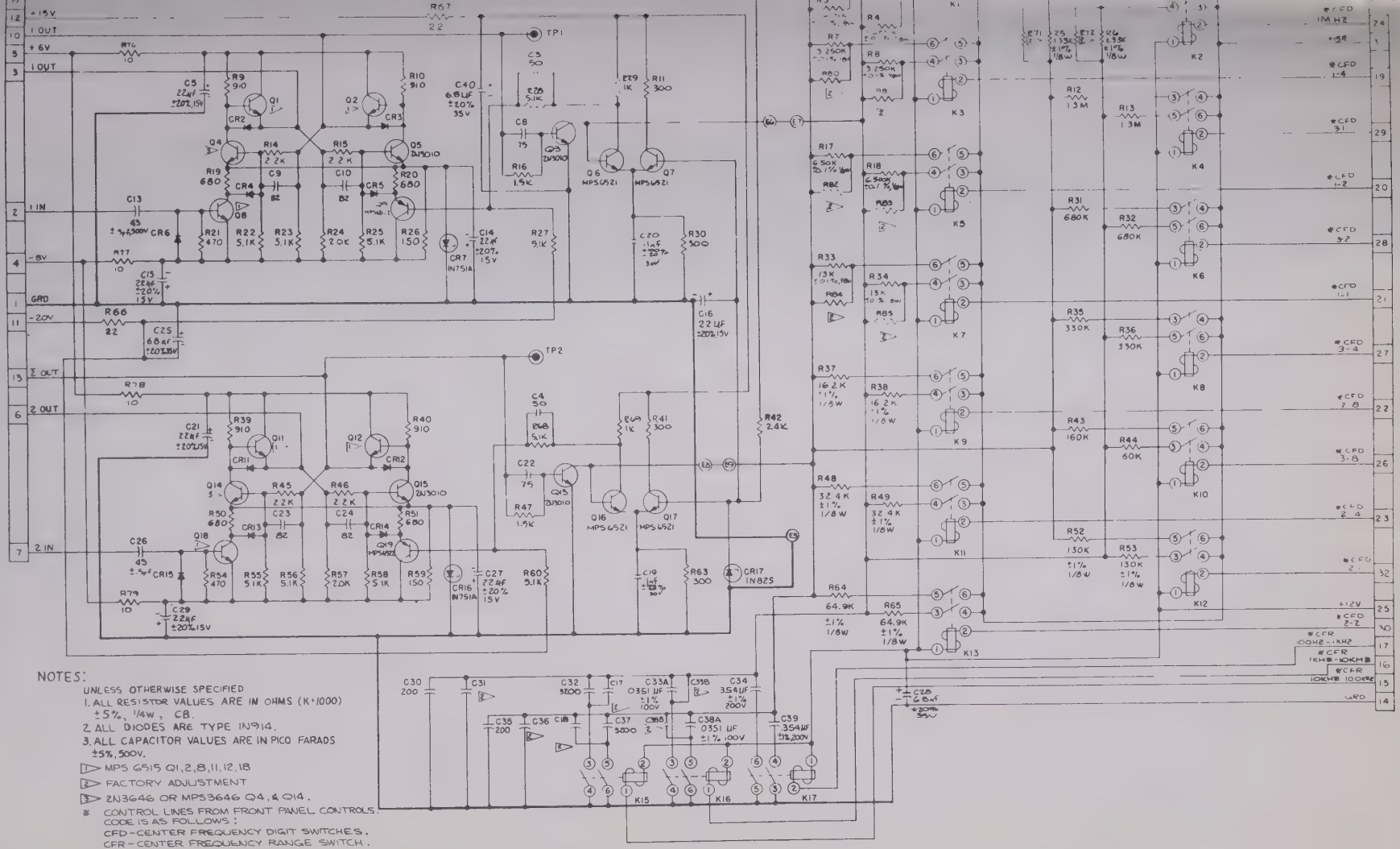

Figure 5-15. Detector Printed-Circuit Card A2J8, Schematic Diagram

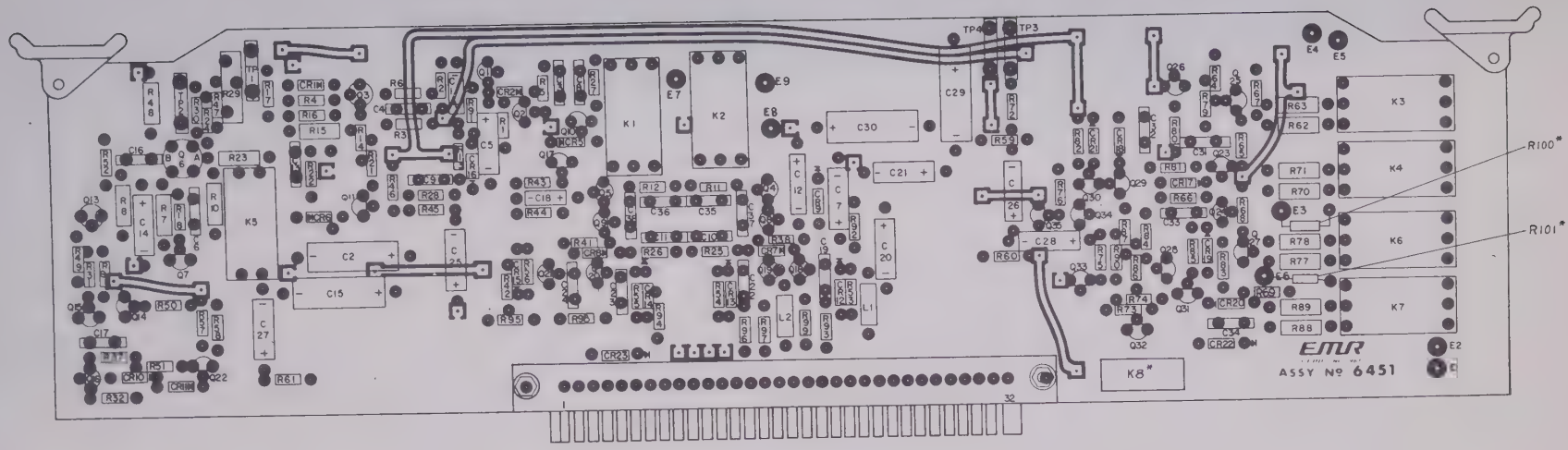

NOTES:
1. EMR DRAWING NO. 6451
* THESE COMPONENTS USED ON 4140-M5 ONLY.

Figure 5-16. Voltage Switch Printed-Circuit Card A2J10, Location of Components

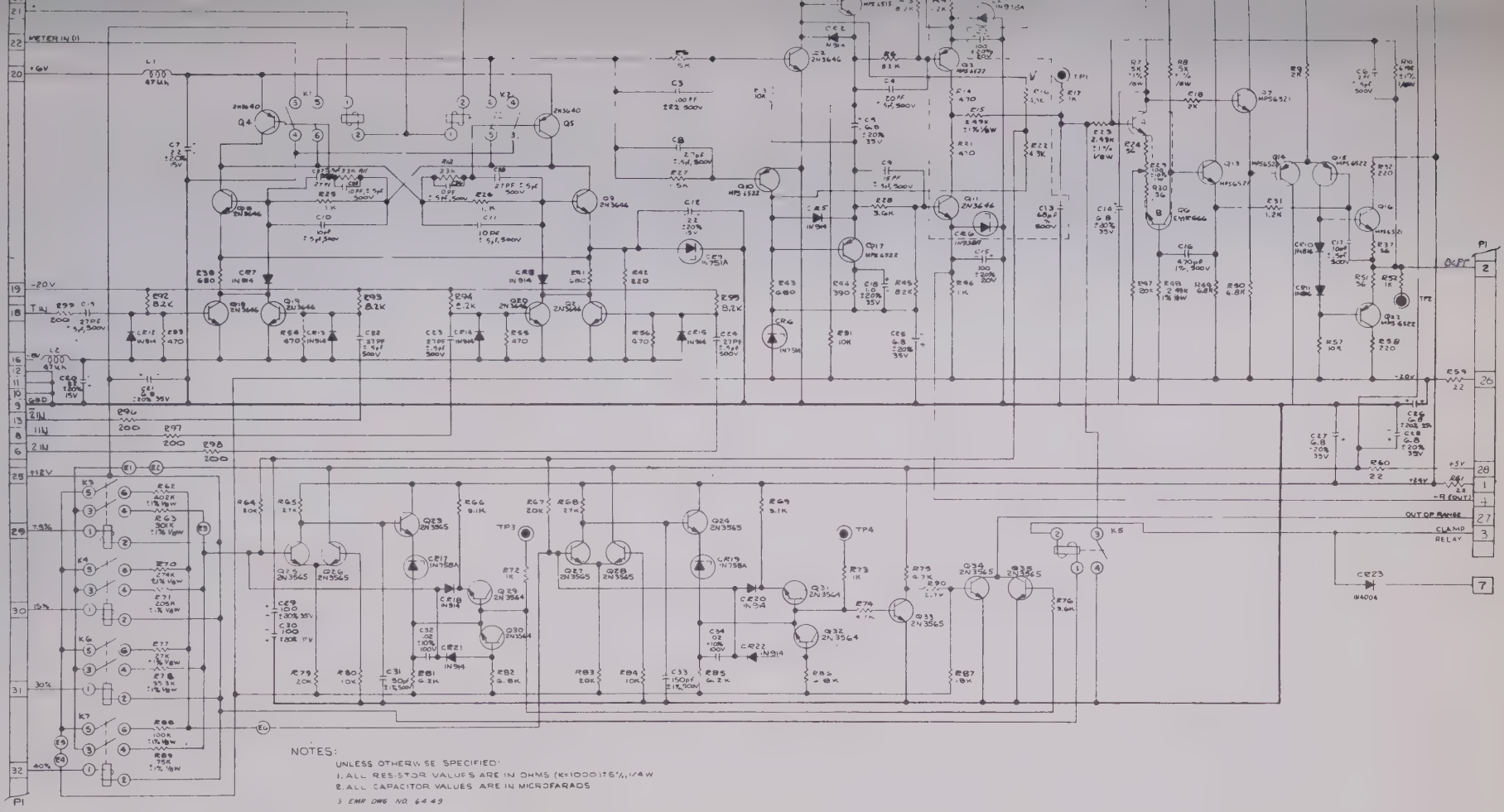

NOTES:

UNLESS OTHERWISE SPECIFIED:

1. ALL RESISTOR VALUES ARE IN OHMS (K=1000) ±5%, 1/4W
2. ALL CAPACITOR VALUES ARE IN MICROFARADS
3. EMR DWG NO. 6449

Figure 5-17. Voltage Switch Printed-Circuit Card A2J10, Schematic Diagram

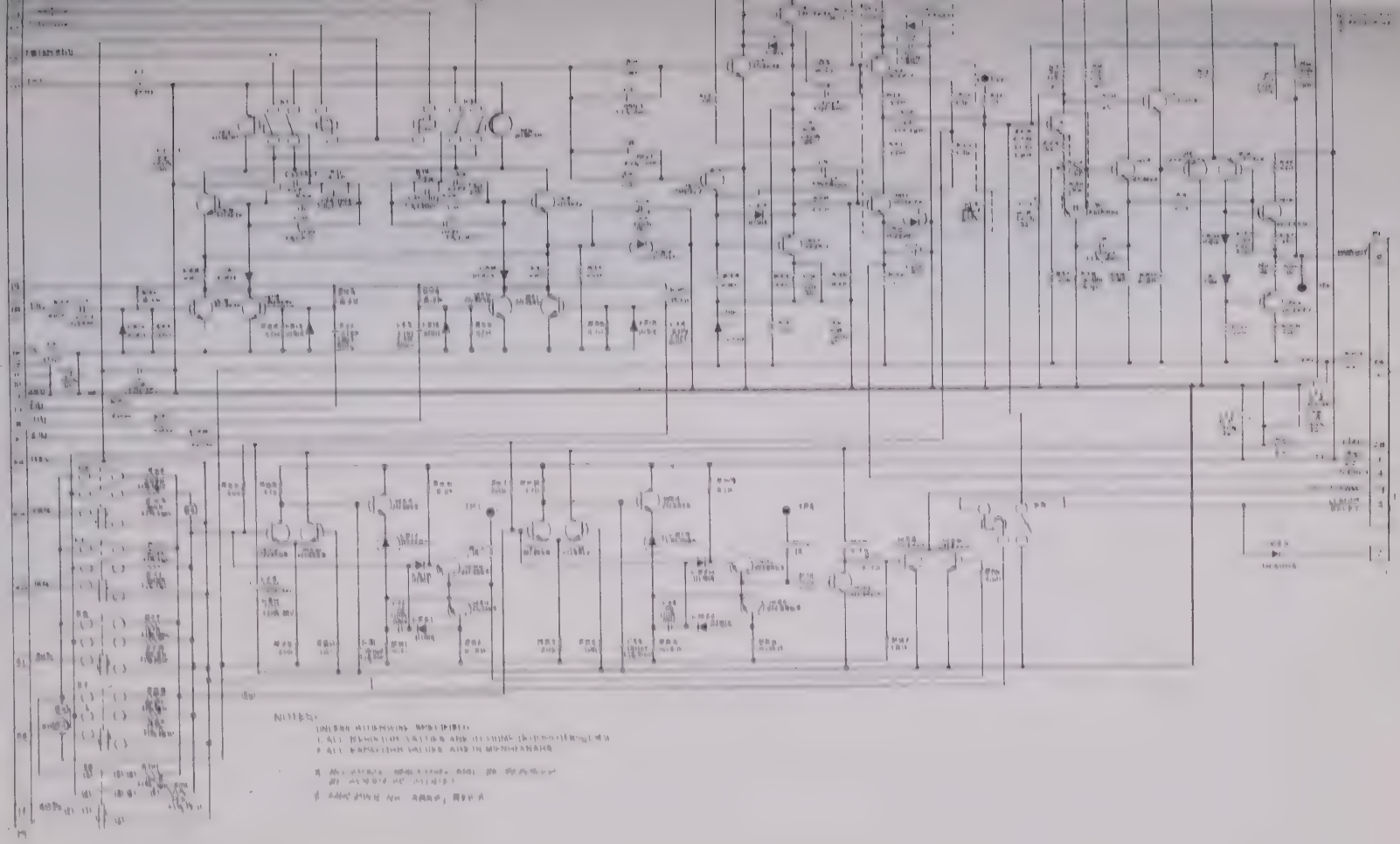

Figure 5-17A. Model 4140-M5 Voltage Switch Card, Schematic Diagram

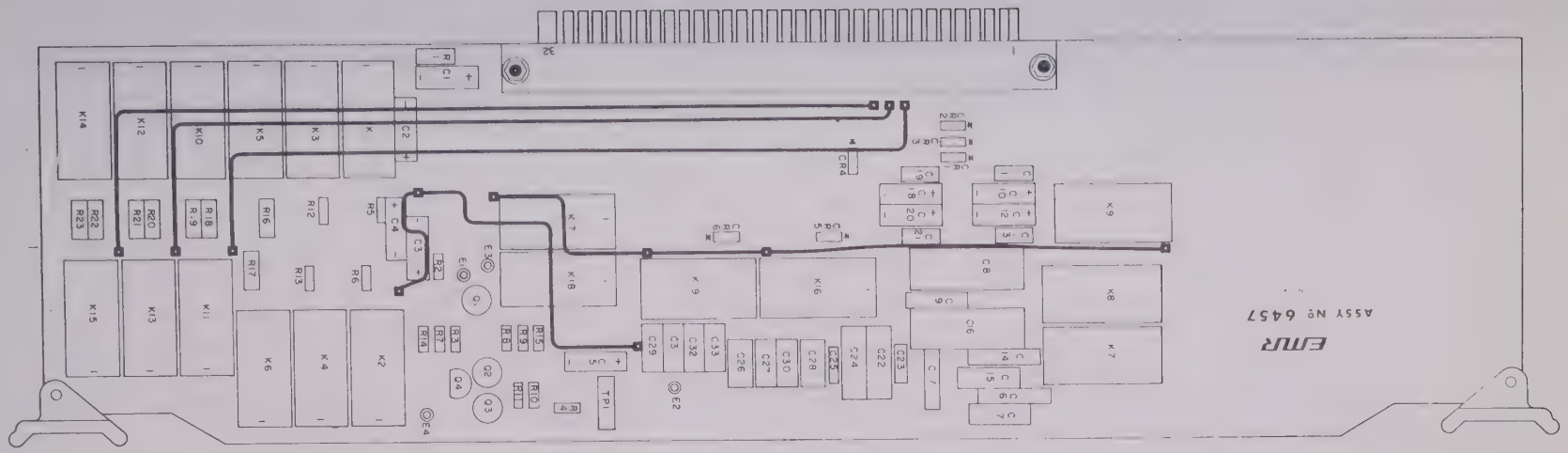

NOTE:
1. EMR DRAWING NO. 6457.

Figure 5-18. LPOF Single-Pole Printed-Circuit Card A2J11, Location of Components

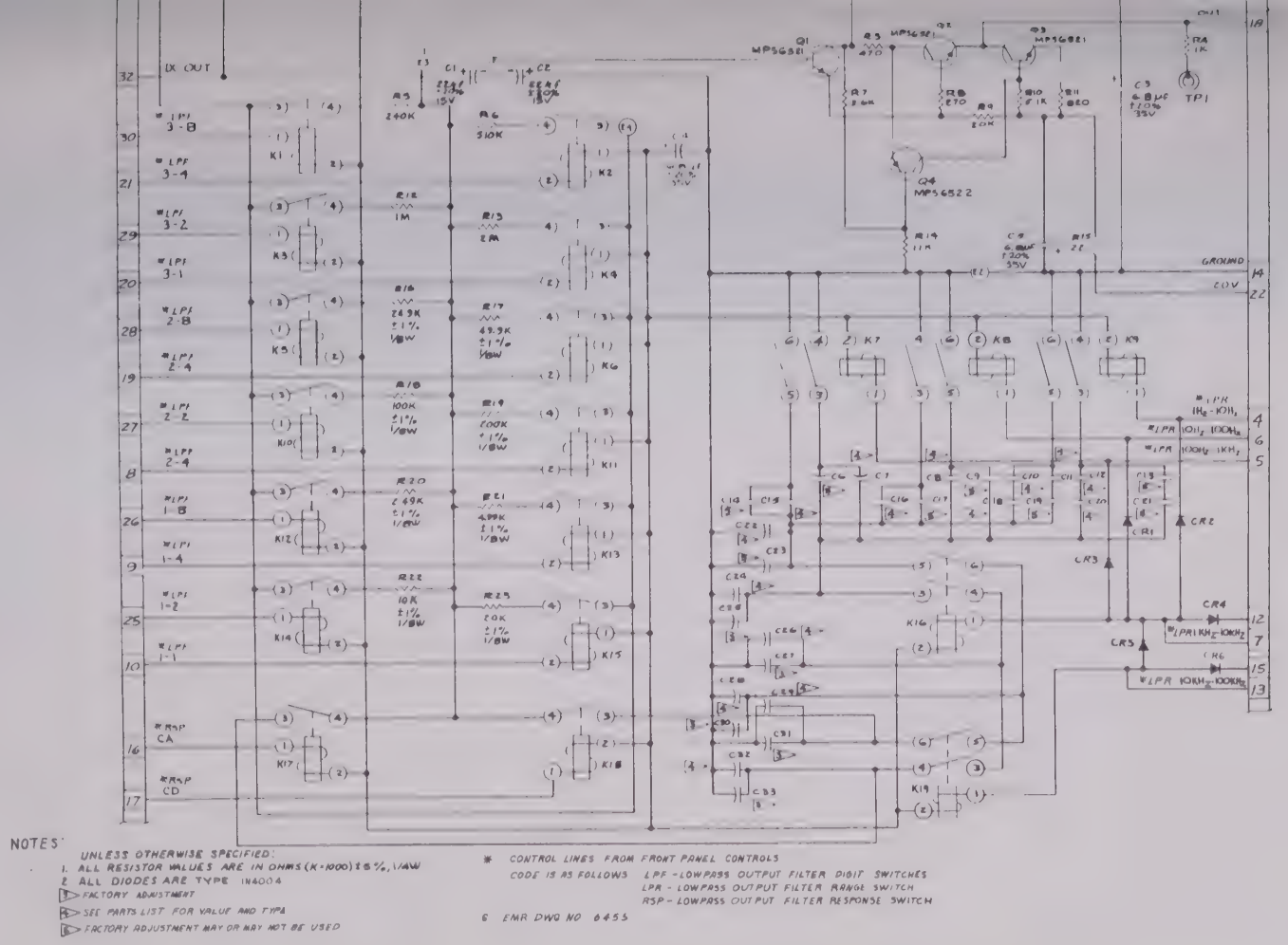

NOTES:

UNLESS OTHERWISE SPECIFIED:

1. ALL RESISTOR VALUES ARE IN OHMS (K=1000) ±5%, 1/4W
2. ALL DIODES ARE TYPE 1N4004

△ FACTORY ADJUSTMENT

▲ SEE PARTS LIST FOR VALUE AND TYPE

◇ FACTORY ADJUSTMENT MAY OR MAY NOT BE USED

* CONTROL LINES FROM FRONT PANEL CONTROLS

CODE IS AS FOLLOWS: LPF - LOWPASS OUTPUT FILTER DIGIT SWITCHES
LPR - LOWPASS OUTPUT FILTER RANGE SWITCH
RSP - LOWPASS OUTPUT FILTER RESPONSE SWITCH

6 EMR DWG NO 6455

Figure 5-19. LPOF Single-Pole Printed-Circuit Card, Schematic Diagram

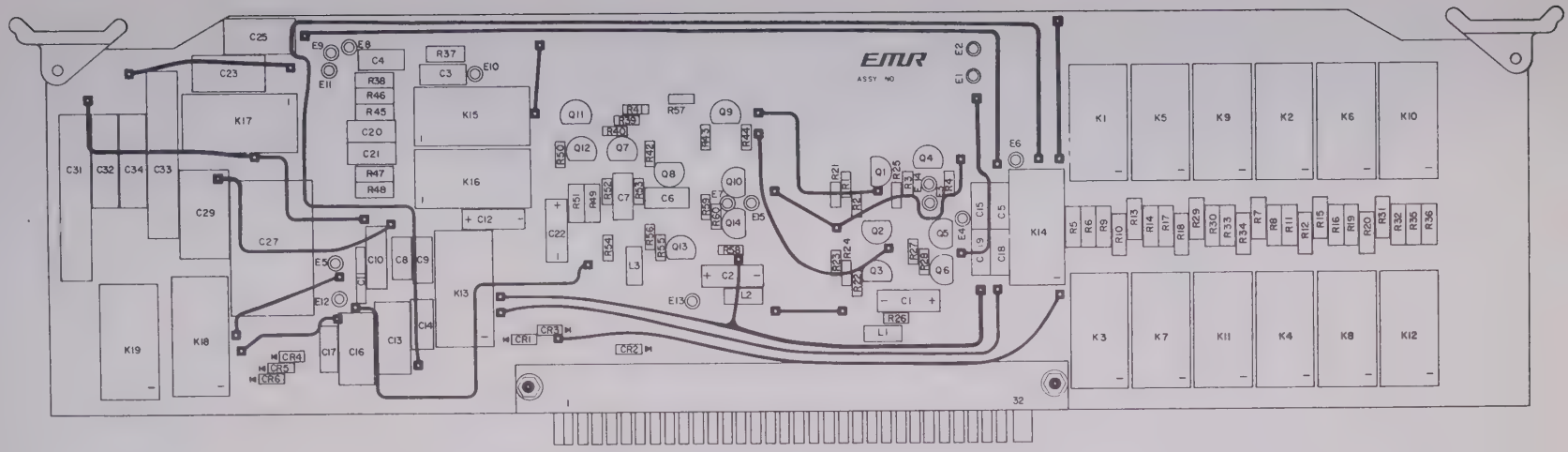

NOTE:
1. EMR DRAWING NO. 7525.

Figure 5-20. LPOF Pole-Pair Printed-Circuit Card A2J12, Location of Components

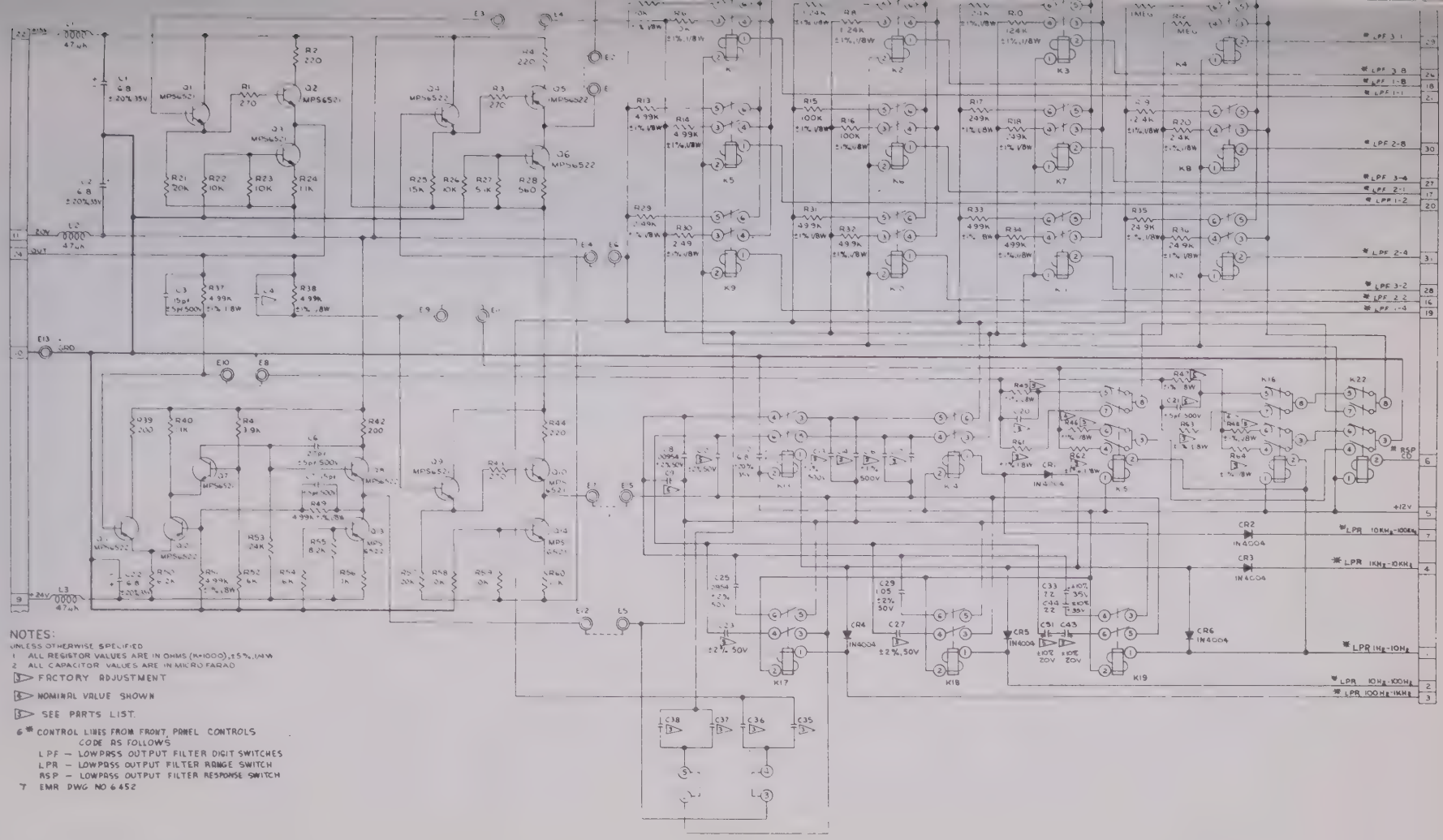

Figure 5-21. LPOF Pole-Pair Printed-Circuit Card A2J12, Schematic Diagram

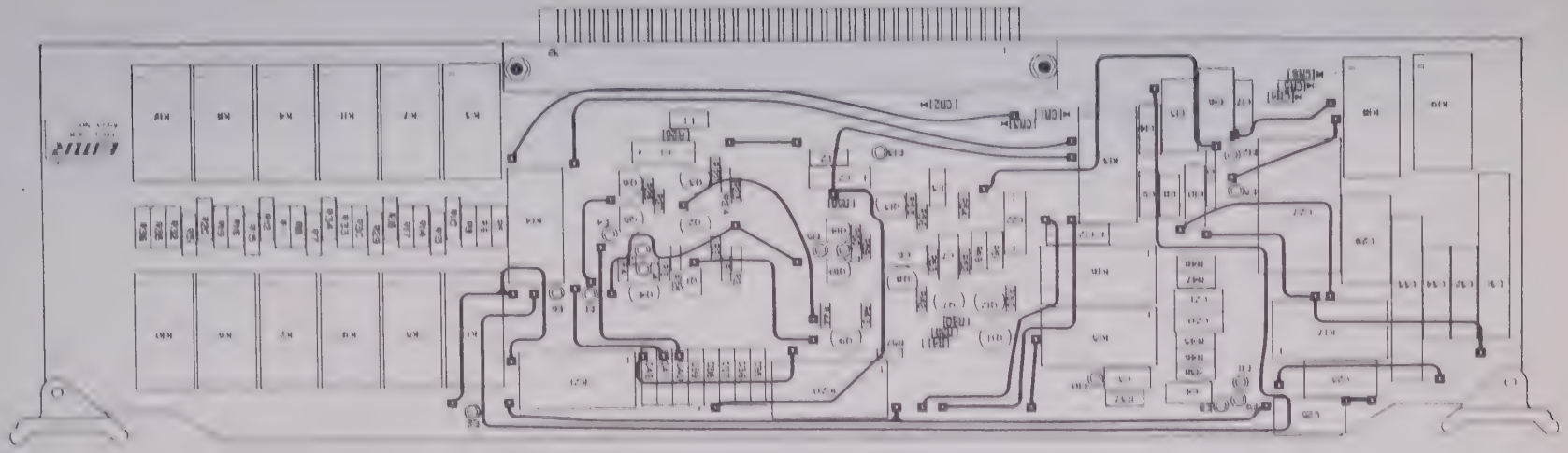

NOTE
1. EMR DRAWING NO. 7826.

Figure 5-22. LPOF Pole-Pair Printed-Circuit Card A2J13, Location of Components

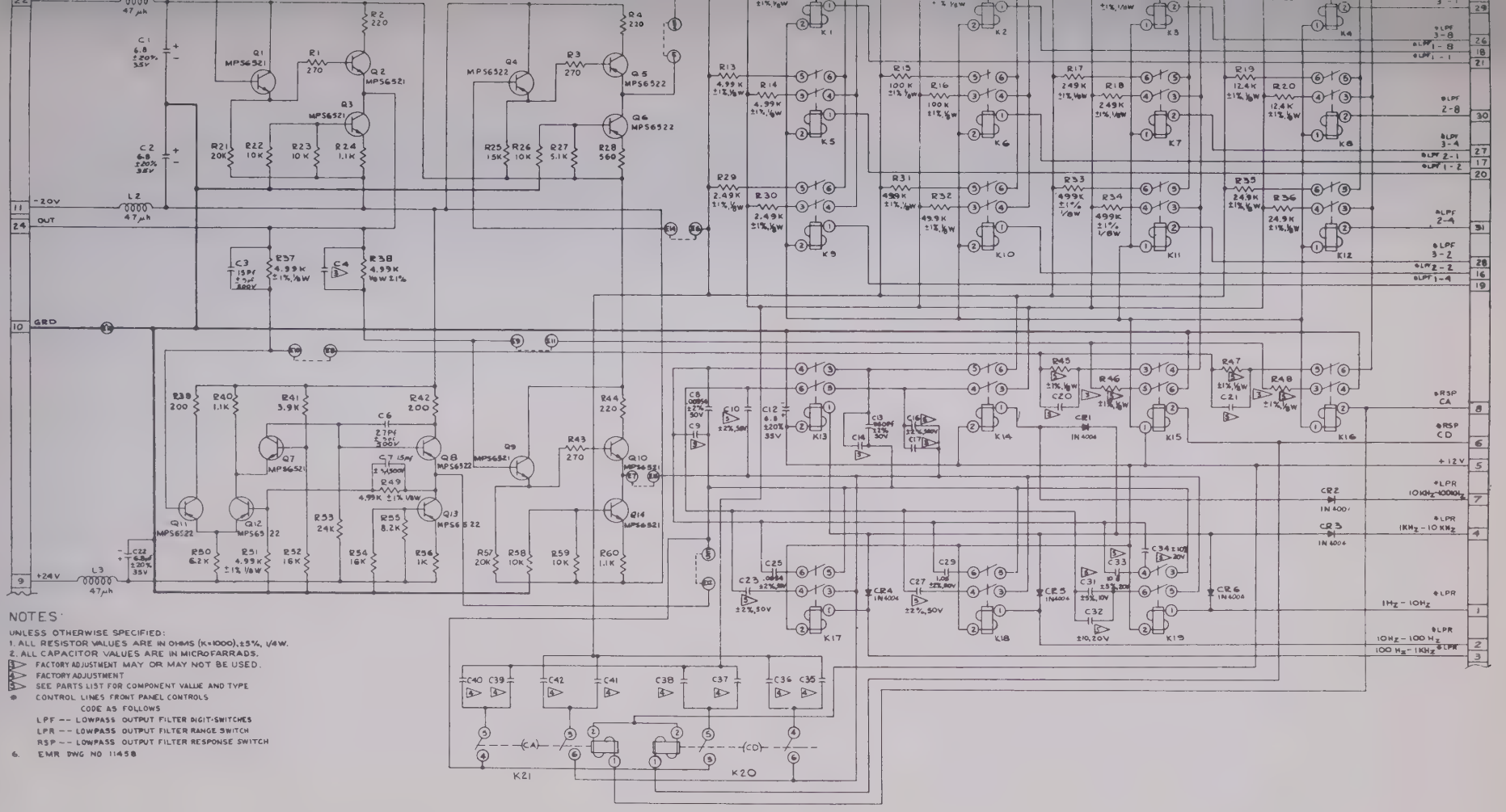

NOTES:

UNLESS OTHERWISE SPECIFIED:

1. ALL RESISTOR VALUES ARE IN OHMS (K=1000), ±5%, 1/4W.
2. ALL CAPACITOR VALUES ARE IN MICROFARADS.

FACTORY ADJUSTMENT MAY OR MAY NOT BE USED.
FACTORY ADJUSTMENT
SEE PARTS LIST FOR COMPONENT VALUE AND TYPE
● CONTROL LINES FRONT PANEL CONTROLS

CODE AS FOLLOWS

LPF -- LOWPASS OUTPUT FILTER DIGIT-SWITCHES
LPR -- LOWPASS OUTPUT FILTER RANGE SWITCH
RSP -- LOWPASS OUTPUT FILTER RESPONSE SWITCH

6. EMR DWG NO 11458

Figure 5-23. LPOF Pole-Pair Printed-Circuit Card A2J13, Schematic Diagram

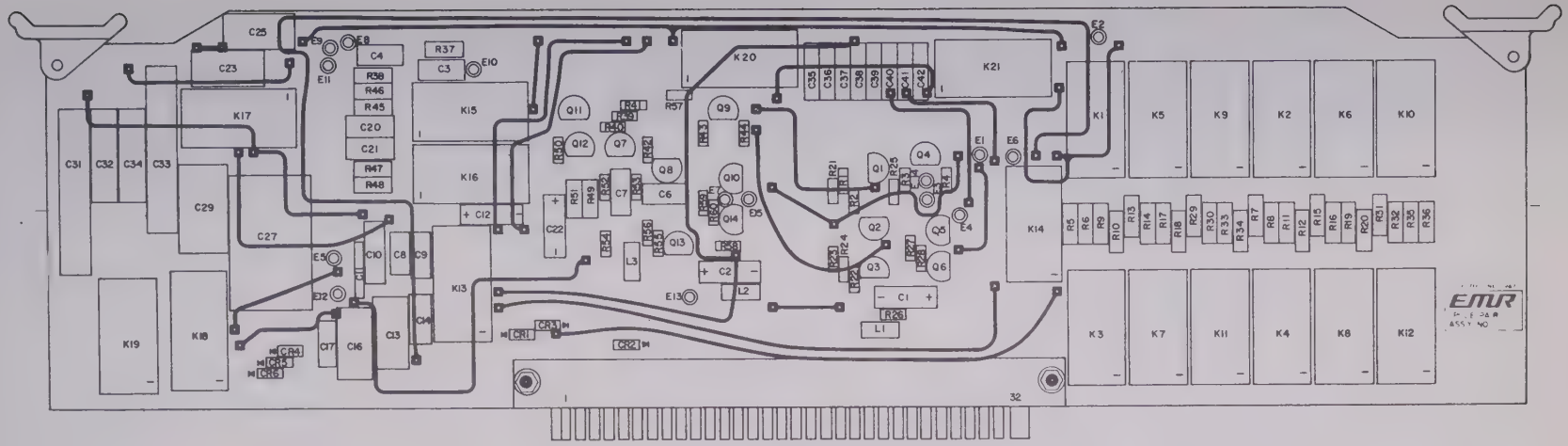

NOTE:
1. EMR DRAWING NO. 7527.

Figure 5-24. LPOF Pole-Pair Printed-Circuit Card A2J14, Location of Components

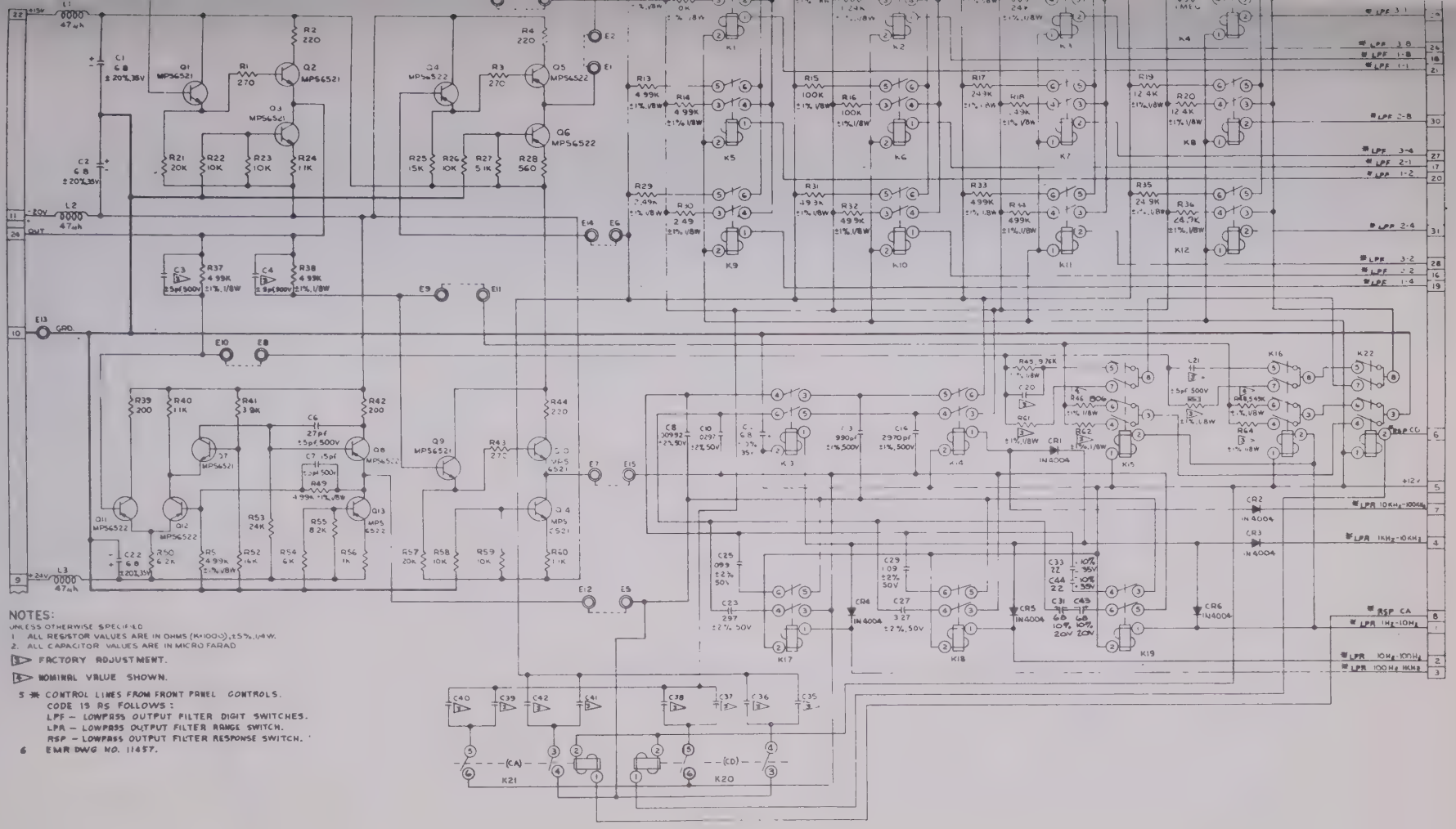

Figure 5-25. LPOF Pole-Pair Printed-Circuit Card A2J14, Schematic Diagram

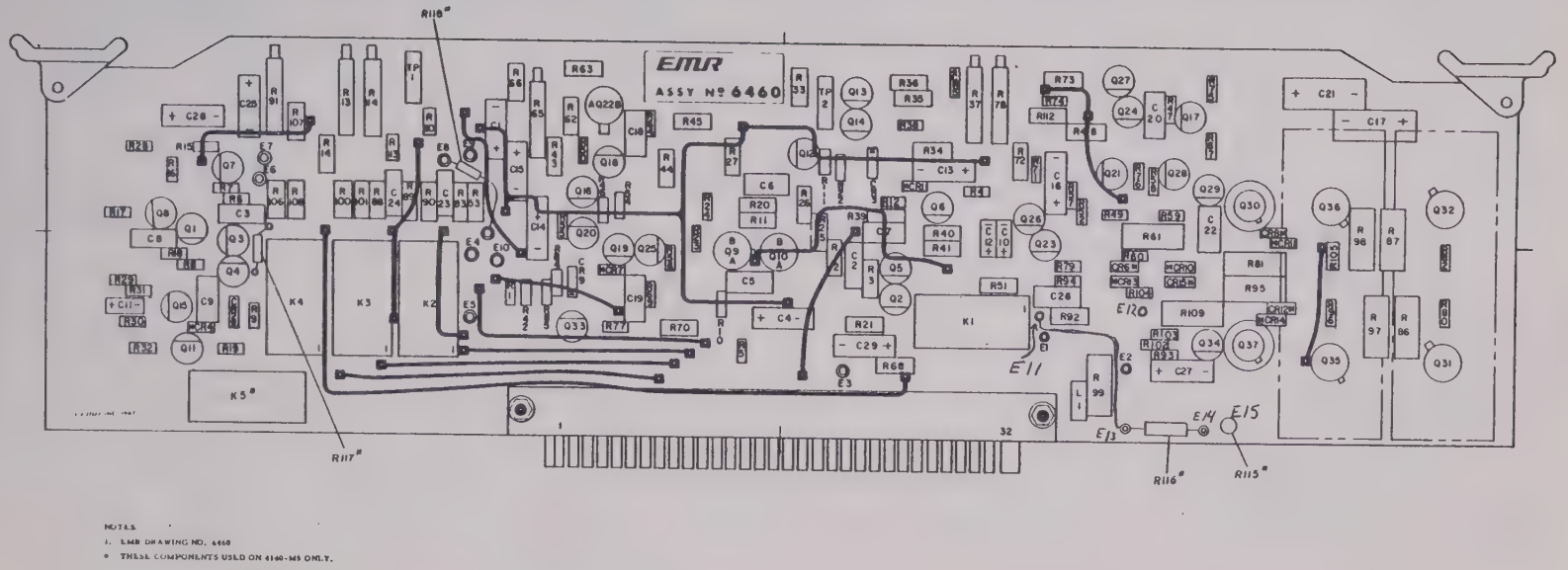

Figure 5-26. Output Printed-Circuit Card A2J15, Location of Components

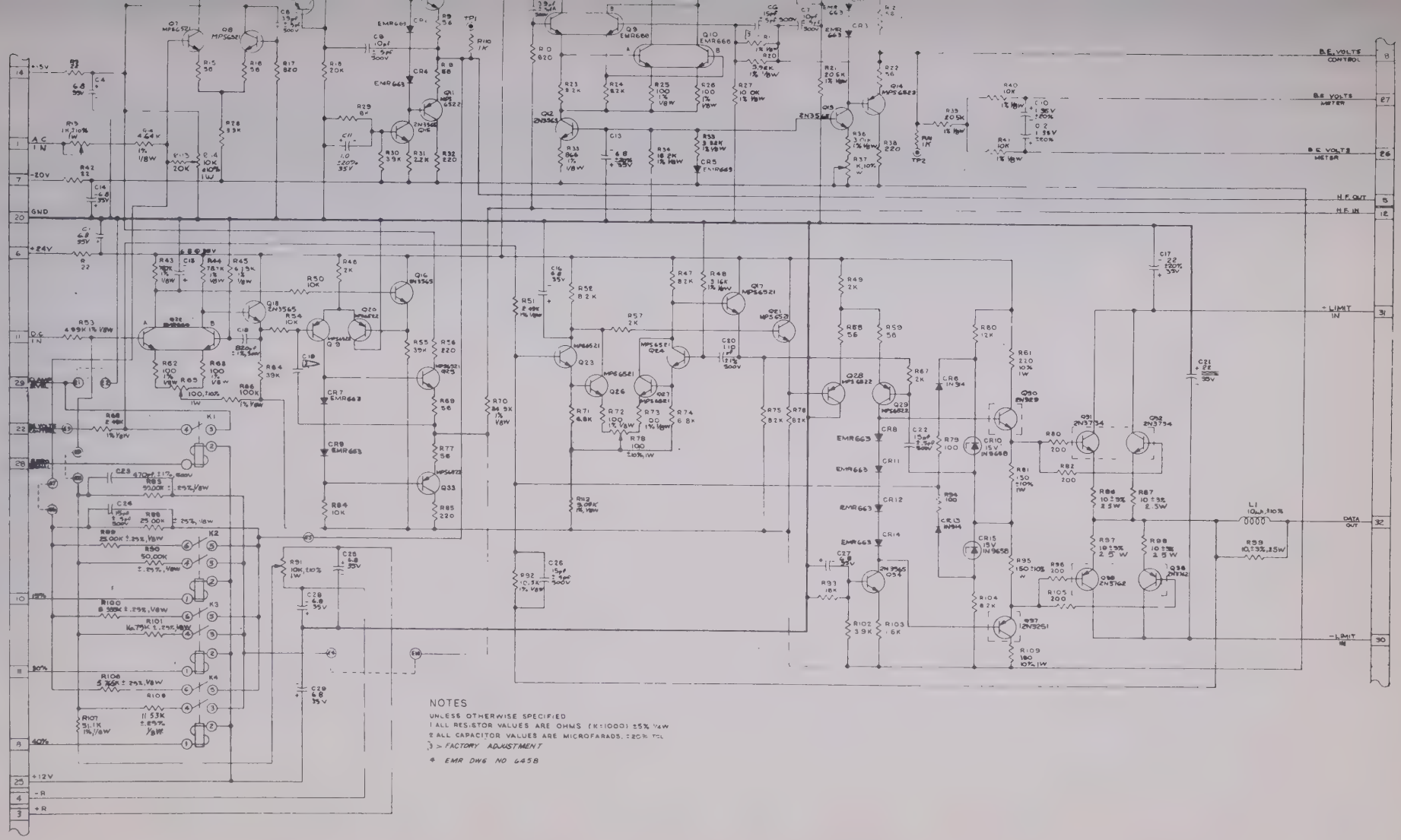

Figure 5-27. Output Printed-Circuit Card A2J15, Schematic Diagram

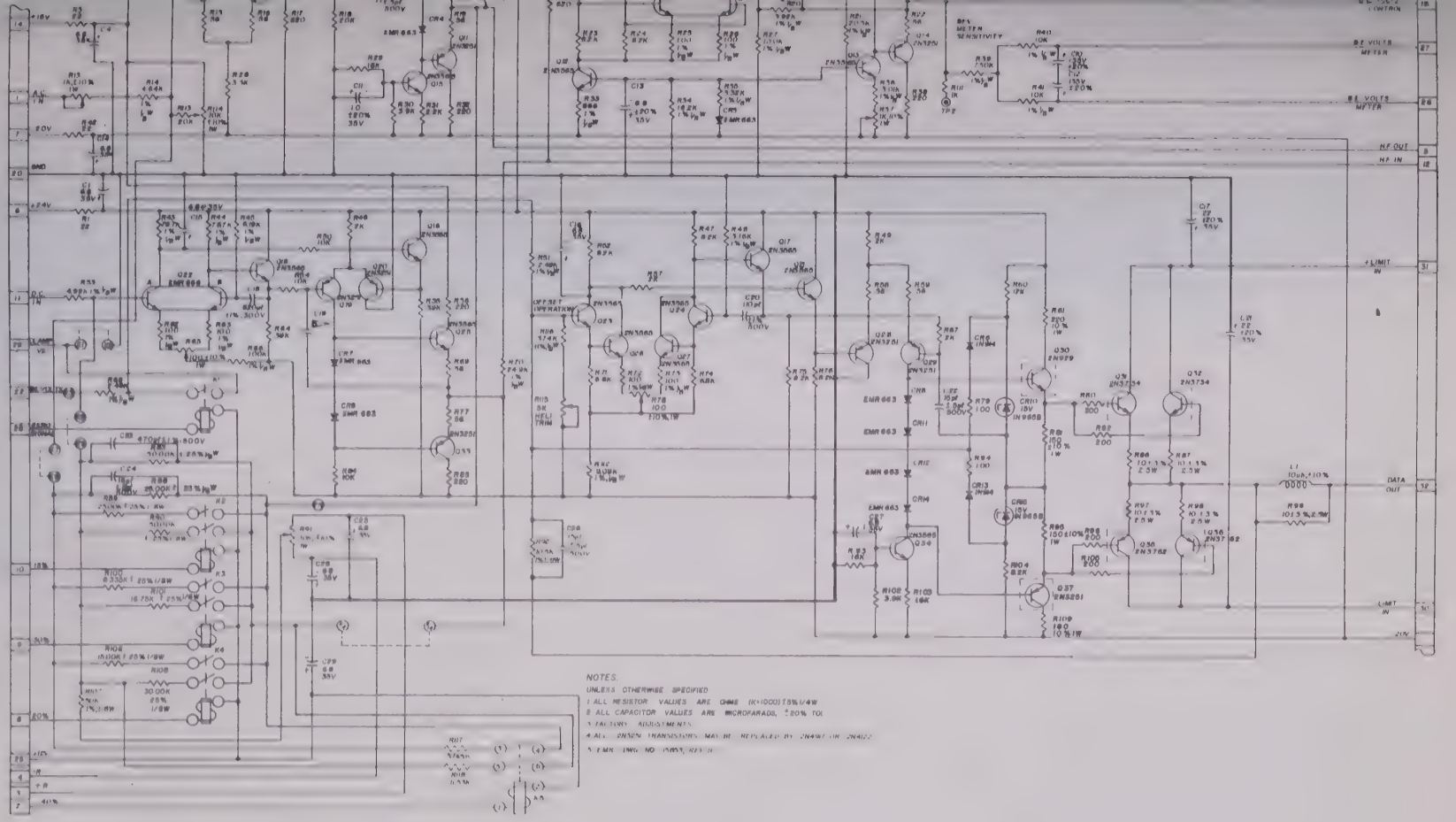

Figure 5-27A. Model 4140-M5 Output Card, Schematic Diagram

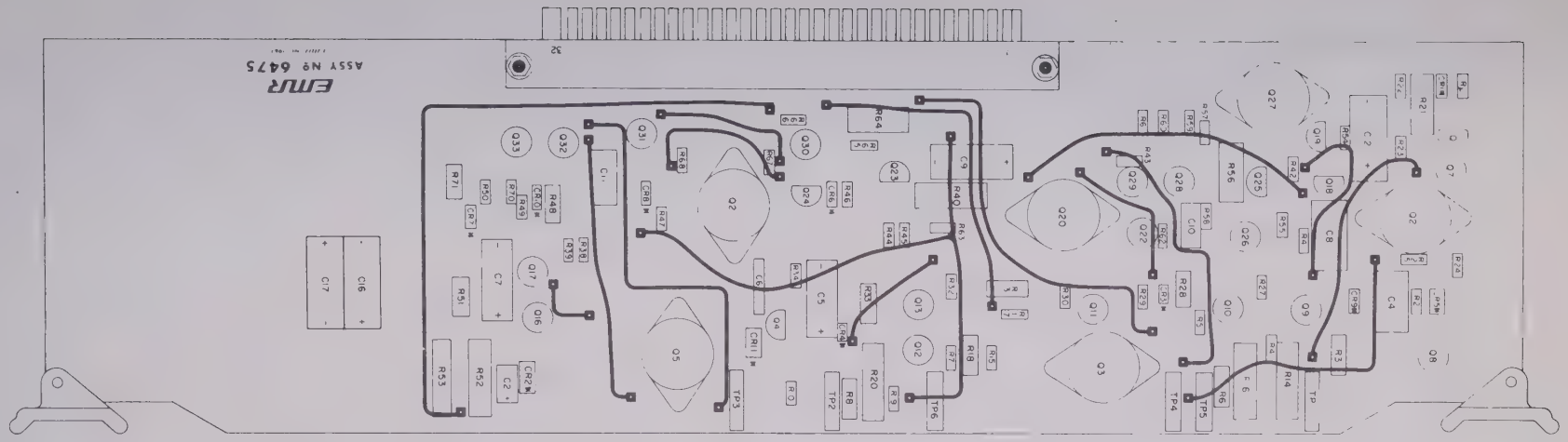

NOTE:
1. EMR DRAWING NO. 6475.

Figure 5-28. Regulator Printed-Circuit Card A2J16, Location of Components

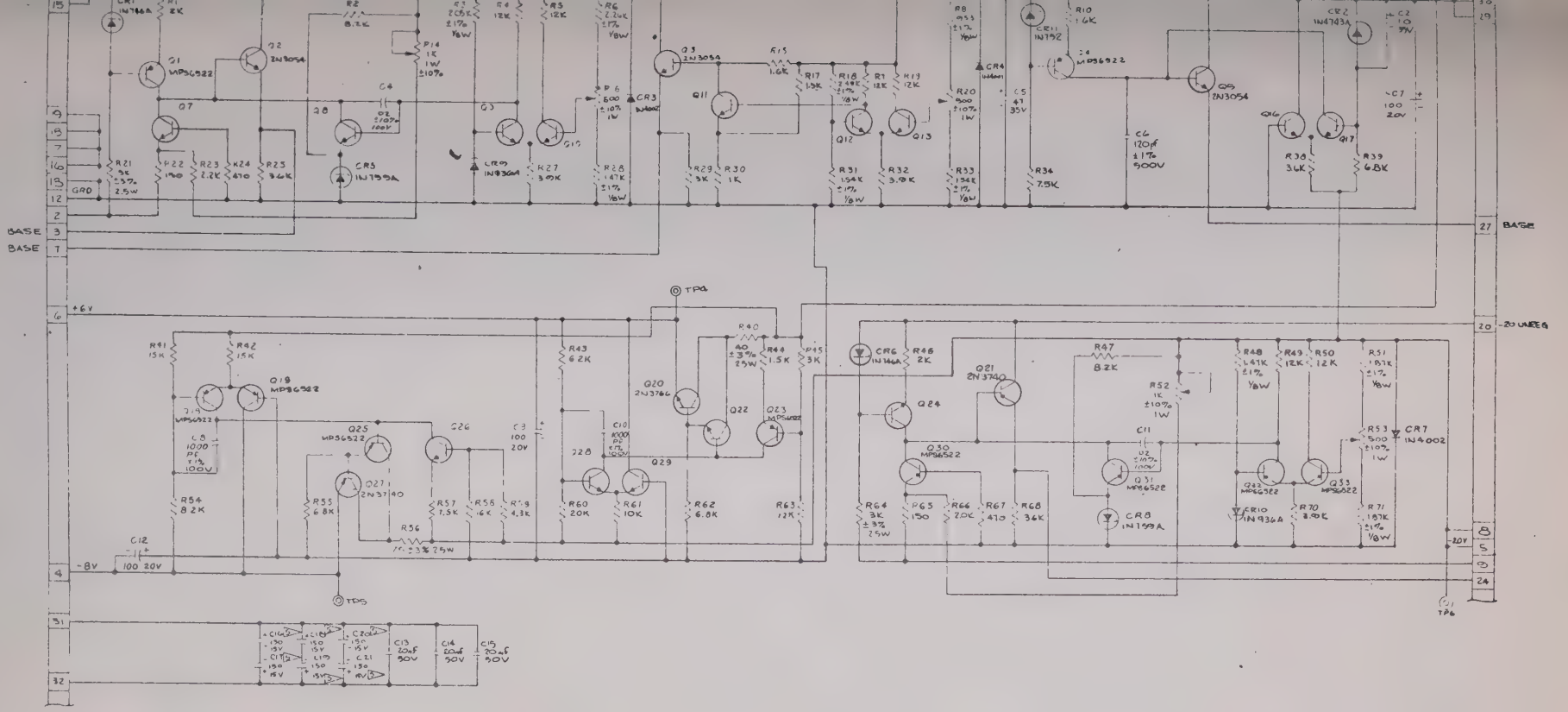

NOTES: (UNLESS OTHERWISE NOTED)
1. ALL RESISTANCE IN OHM (K=1000)
2. ALL RESISTORS ±5% ⅛ W
3. ALL CAPACITORS IN μF, ±20%
4. ALL TRANSISTORS 2N
5. NOT USED ON THIS CONFIGURATION.
6. EMR DWG NO 6473

Figure 5-29. Regulator Printed-Circuit Card A2J16, Schematic Diagram

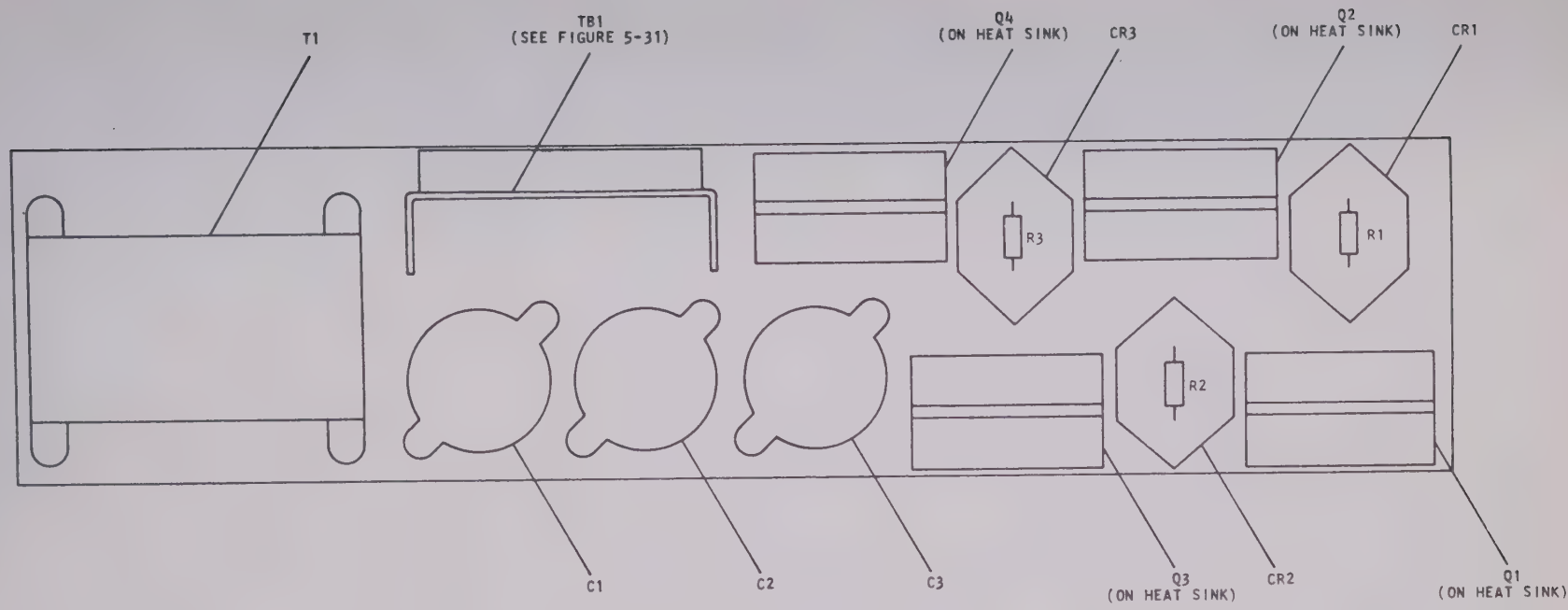

NOTE:

1. EMR DRAWING CONTROL NO. 4140-021.

Figure 5-30. Power Supply Assembly A4

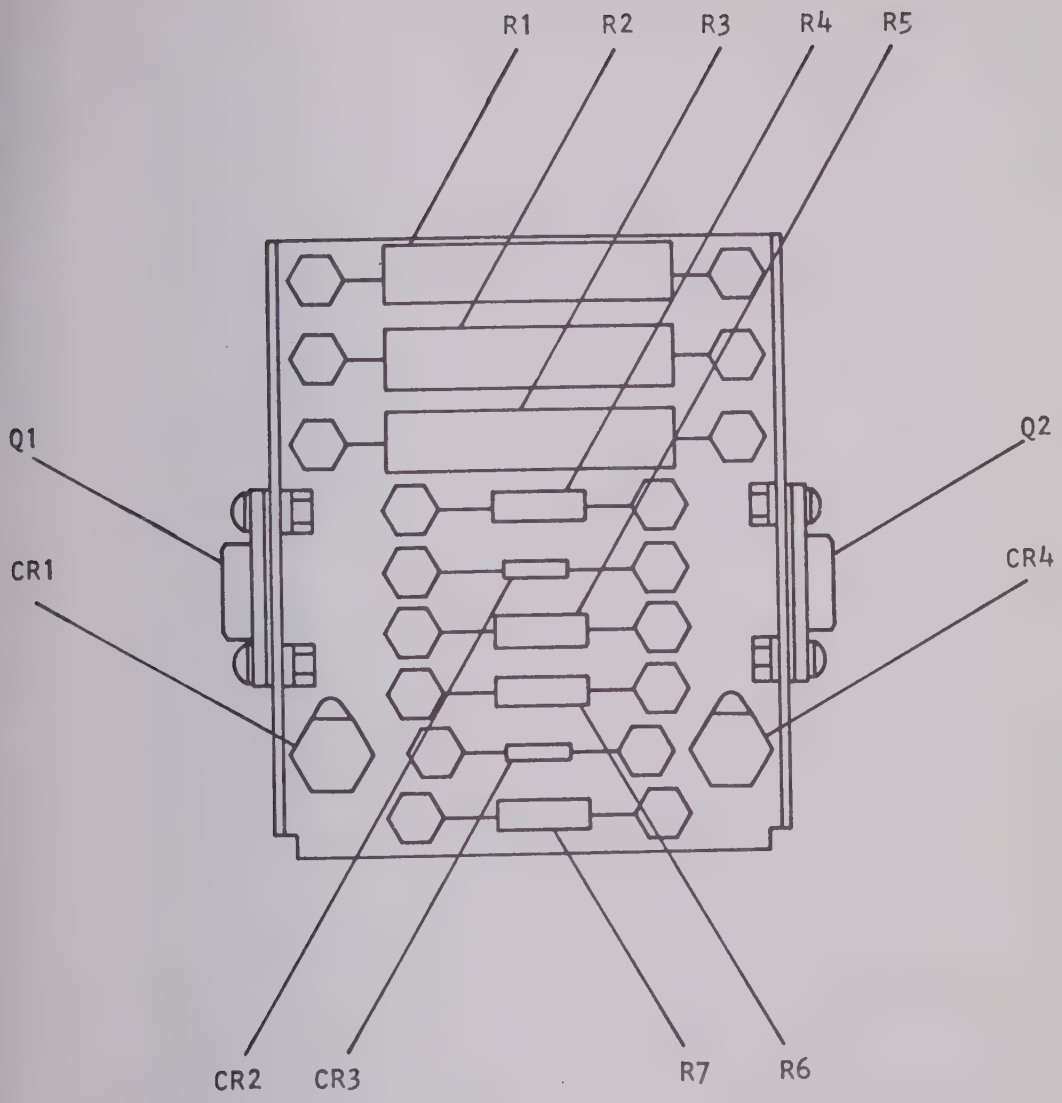

NOTE:

1. EMR DRAWING CONTROL NO. 4140-022.

Figure 5-31. Component Mounting Board A4TB1, Location of Components

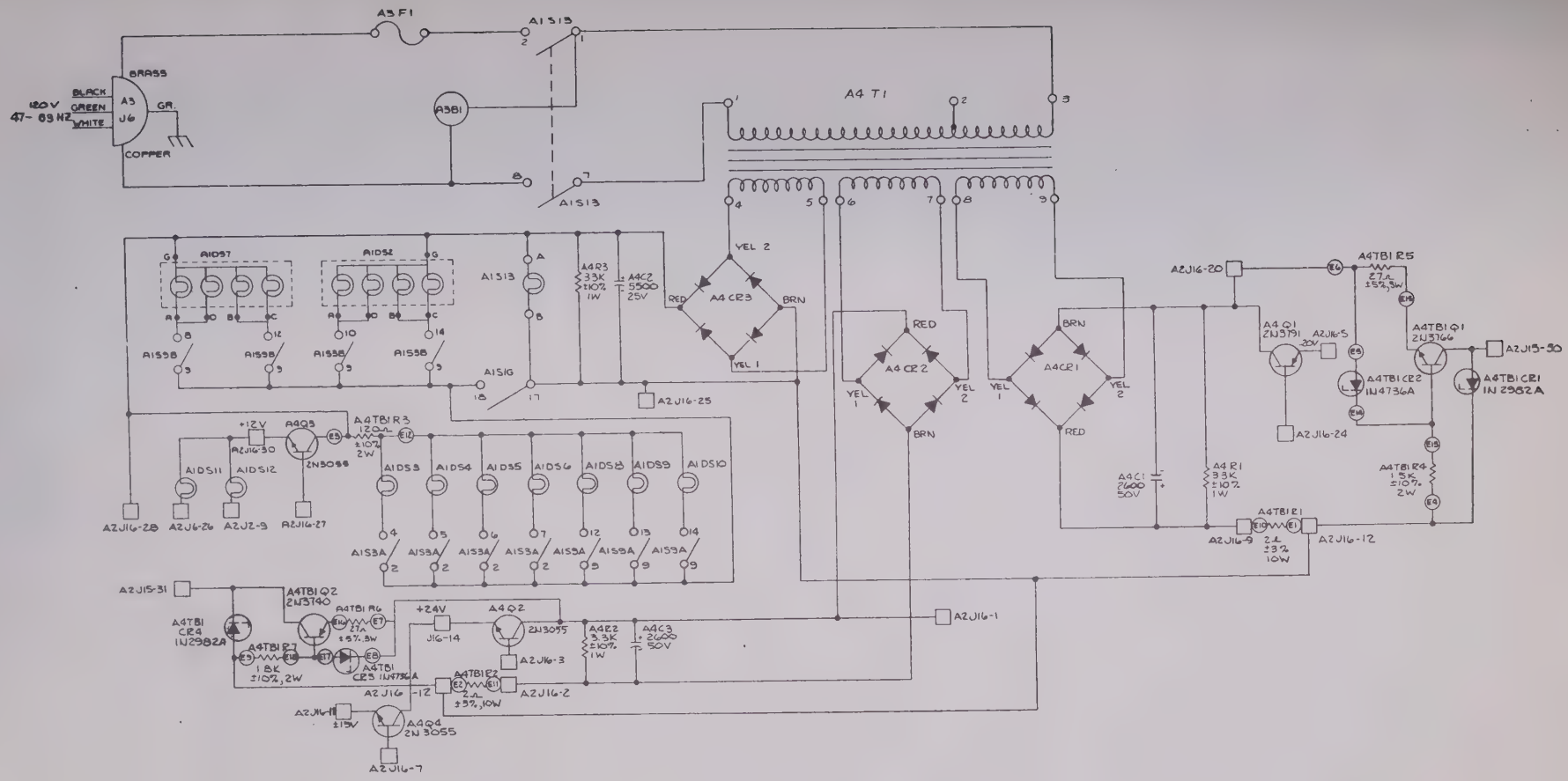

1. EMR DWG. No. 7979

Figure 5-32. Power Supply Assembly A4, Schematic Diagram

SECTION 6

PARTS LISTS

GENERAL

ection contains information necessary to identify electronic components
Model 4140 Programmable Tunable Discriminator. Parts information
sented in tabular form and is keyed to illustrations in Section 5 of this
l. Circuit Symbol No. column identifies the particular assembly or part
reference designation; the Description column gives a complete descrip-
the item; the Manufacturer column gives the name and manufacturer's
umber.

components in the parts list tables contain an EMR source control number.
components are identified by an asterisk adjacent to the manufacturer's
n the Name portion of the Manufacturer column. A coded number in the
lo. column references approved vendors in the Approved Vendors List,
6-19.

n component values are factory selected during manufacture for optimum
mance of each unit. These components are identified in the parts list
ng factory adjustments and whenever replaced, should be replaced with
me value component. If unable to identify a component value, the test
dures included in Appendix A may be conducted for the card in question
ermine the component value.

e 6-1. Model 4140 Programmable Tunable Discriminator Assembly
(Ref. Figure 5-1)

CUIT BOL O.	DESCRIPTION	MANUFACTURER	
		NAME	PART NO.
	MODEL 4140 PROGRAMMABLE TUNABLE DISCRIMINATOR ASSEMBLY	EMR	6250
	MODEL 4140-M5 PROGRAMMABLE TUNABLE DISCRIMINATOR ASSEMBLY	EMR	15694
	FRONT PANEL/SUBPANEL ASSEMBLY (See Table 6-2 for breakdown)	EMR	6247
	CARD TRAY ASSEMBLY (See Table 6-3 for breakdown)	EMR	6240
	REAR PANEL ASSEMBLY (See Table 6-17 for breakdown)	EMR	6245
	POWER SUPPLY ASSEMBLY (See Table 6-18 for breakdown)	EMR	6246

Table 6-2. Front-Panel/Subpanel Assembly, Parts List (Ref. Figure 5-2)

CIRCUIT SYMBOL NO.	DESCRIPTION	MANUFACTURER	
		NAME	PART NO.
	FRONT PANEL/SUBPANEL ASSEMBLY	EMR	6247
1	INDICATOR UNIT	EMR	8974
3 thru DS6	DECIMAL LITE ASSEMBLY	EMR	7327
	LAMP, T.I. - 3/4, 28V, .004 amp.	G.E.	327
7	INDICATOR UNIT	EMR	8974-1
8 thru DS10	Same as DS3		
11 and DS12	LITE, 18V, 40 Ma	Eldema	CFW-22556-07
1	MICROAMMETER, DC	EMR*	802 (Style 0)
2	MICROAMMETER, DC	EMR*	802 (Style 9)
	POTENTIOMETER, 5K ±5%, 3/4W	Clarostat	CM-35065
	POTENTIOMETER, 500Ω ±5%, 3/4W	Clarostat	CM-35064
	SWITCH	CTS	7632
(Model 4140-M5)	SWITCH	CTS	Type T81 with 8T9 wafers
	SWITCH	CTS	7631-1
(Model 4140-M5)	SWITCH	CTS	Type T206
	SWITCH	CTS	7631-1
	SWITCH	CTS	7631
thru S6	SWITCH, Thumbwheel	E.E. Co.	Model 802
	SWITCH, Thumbwheel	E.E. Co.	Model 8021
	SWITCH, Same as S2		
	SWITCH, Same as S3		
0 and S11	SWITCH, Same as S4		
2	SWITCH, Same as S7		
3	SWITCH/INDICATOR	Pendar	B507L256W1-L
1 thru TP4	TEST POINT	E.F. Johnson	105-251-1

*Correlate coded number in PART NO. column with approved vendor in Table 6-19.

Table 6-3. Card Tray Assembly, Parts List (Ref. Figure 5-1)

CIRCUIT SYMBOL NO.	DESCRIPTION	MANUFACTURER	
		NAME	PART NO.
A2	CARD TRAY ASSEMBLY	EMR	6240
A2J1	BANDPASS INPUT FILTER #1 PRINTED-CIRCUIT CARD (See Table 6-4 for breakdown)	EMR	6463
A2J2	INPUT PRINTED-CIRCUIT CARD (See Table 6-5 for breakdown)	EMR	6472
A2J3	BANDPASS INPUT FILTER #2 PRINTED-CIRCUIT CARD (See Table 6-6 for breakdown)	EMR	6466
A2J4	TAPE-SPEED COMPENSATION PRINTED-CIRCUIT CARD (See Table 6-7 for breakdown)	EMR	6469
A2J6	LIMITER PRINTED-CIRCUIT CARD (See Table 6-8 for breakdown)	EMR	6445
A2J8	DETECTOR PRINTED-CIRCUIT CARD (See Table 6-9 for breakdown)	EMR	6448
A2J10	VOLTAGE SWITCH PRINTED-CIRCUIT CARD (See Table 6-10 for breakdown)	EMR	6451
A2J11	LOW PASS OUTPUT FILTER SINGLE POLE PRINTED-CIRCUIT CARD (See Table 6-11 for breakdown)	EMR	6457
A2J12	LOW PASS OUTPUT FILTER POLE PAIR PRINTED-CIRCUIT CARD (See Table 6-12 for breakdown)	EMR	7525
A2J13	LOW PASS OUTPUT FILTER POLE PAIR PRINTED-CIRCUIT CARD (See Table 6-13 for breakdown)	EMR	7526
A2J14	LOW PASS OUTPUT FILTER POLE PAIR PRINTED-CIRCUIT CARD (See Table 6-14 for breakdown)	EMR	7527
A2J15	OUTPUT PRINTED-CIRCUIT CARD (See Table 6-15 for breakdown)	EMR	6460
A2J16	REGULATOR PRINTED-CIRCUIT CARD (See Table 6-16 for breakdown)	EMR	6475
A2J17	EXTENDER PRINTED-CIRCUIT CARD	EMR	7553
A2C1 thru A2C20	CAPACITOR, 470 Pf ±2%, 500V	EMR*	600
A2R1	RESISTOR, 1K ±5%, 1/4W	MIL-R-11	RC07GF102J
A2R2	RESISTOR, 10K ±5%, 1/4W	MIL-R-11	RC07GF103J
A2CR1 and A2CR2	DIODE	JEDEC	1N4904
	CONNECTOR, Receptacle (Mating connector for printed-circuit cards)	Methode	SD-832S

*Correlate coded number in PART NO. column with approved vendor in Table 6-19.

Table 6-4. Bandpass Input Filter No. 1 Printed-Circuit Card, Parts List (Ref. Figure 5-4)

RCUIT MBOL NO.	DESCRIPTION	MANUFACTURER	
		NAME	PART NO.
	BANDPASS INPUT FILTER NO. 1 PRINTED-CIRCUIT CARD	EMR	6463
d C2	CAPACITOR, Factory adjustment, may or may not be used	EMR*	600
d C4	CAPACITOR, 6.8 µf ±20%, 35V	EMR*	601
d C6	CAPACITOR, Same as C1		
	CAPACITOR, Same as C3		
	CAPACITOR, 15 Pf ±0.5 Pf, 500V	EMR*	600
	CAPACITOR, 1µf ±20%, 35V	EMR*	601
	CAPACITOR, Same as C3		
	CAPACITOR, Same as C9		
	CAPACITOR, Same as C3		
nd C13	CAPACITOR, Same as C1		
	CAPACITOR, Factory adjustment	EMR*	601
ıru C21	CAPACITOR, Same as C1		
nd C25	CAPACITOR, Same as C1		
	CAPACITOR, Same as C1		
nd C29	CAPACITOR, Same as C1		
	CAPACITOR, 3 Pf ±0.5 Pf, 500V, nominal value	EMR*	600
	CAPACITOR, 160 Pf ±1%, 500V, nominal value	EMR*	600
	CAPACITOR, 10 Pf ±0.5 Pf, 500V, nominal value	EMR*	600
	CAPACITOR, Same as C1		
	CAPACITOR, Same as C31		
	CAPACITOR, Same as C1		
	CAPACITOR, Same as C1		
	CAPACITOR, Same as C1		
	CAPACITOR, 30 Pf ±0.5 Pf, 500V, nominal value	EMR*	600
	CAPACITOR, 150 Pf ±1%, 500V	EMR*	600
	CAPACITOR, 0.178 µf ±1%, 100V	Electro-Cube	217A1B1783F
	CAPACITOR, 1600 Pf ±1%, 500V, nominal value	EMR*	600
	CAPACITOR, 43 Pf ±5%, 500V, nominal value	EMR*	600
	CAPACITOR, Same as C1		
	CAPACITOR, 0.0162 µf ±1%, 100V	Electro-Cube	217A1B1622F
	CAPACITOR, 1380 Pf ±1%, 500V, nominal value	EMR*	600
	CAPACITOR, Same as C1		
	CAPACITOR, 120 Pf ±1%, 500V	EMR*	600
	CAPACITOR, Same as C1		
	CAPACITOR. Same as C35		
nd C53	CAPACITOR, Same as C3		
	CAPACITOR, 1 Pf ±0.5 Pf, 500V, nominal value	EMR*	600
	CAPACITOR, Same as C1		
	CAPACITOR, 0.137 µf ±1%, 100V	Electro-Cube	217A1B1373F
	CAPACITOR, 0.0124 µf ±1%, 100V	Electro-Cube	217A1B1242F
ıru C65	CAPACITOR, Same as C1		
	CAPACITOR, Same as C3		
	CAPACITOR, Same as C1		

relate coded number in PART NO. column with approved vendors in Table 6-19.
Table 6-4A for component values for 4140-M5.

able 6-4 (Cont'd.). Bandpass Input Filter No. 1 Printed-Circuit Card, Parts List

RCUIT YMBOL NO.	DESCRIPTION	MANUFACTURER	
		NAME	PART NO.
and CR2	DIODE	JEDEC	1N4004
and CR4	DIODE (1N816)	EMR*	663
	DIODE, Same as CR1		
	DIODE, Same as CR3		
hru K13	RELAY, 2P, 12V	D. Randall	12MC2A
thru K16	RELAY, 3P, 12V	D. Randall	12MC3A
	RELAY, Same as K1		
and K19	RELAY, Same as K14		
thru K22	RELAY, Same as K1		
nd L2	INDUCTOR	EMR*	956
nd Q2	TRANSISTOR	Motorola	MPS6521
nd Q4	TRANSISTOR	Motorola	MPS6522/SPS 2940
nd Q6	TRANSISTOR, Same as Q1		
nd Q8	TRANSISTOR, Same as Q3		
nd Q10	TRANSISTOR	Motorola	MPS6521
	TRANSISTOR, Same as Q3		
thru Q14	TRANSISTOR, Same as Q9		
	TRANSISTOR, Same as Q3		
nd R2	RESISTOR, 22Ω ±5%, 1/4W	MIL-R-11/8	RC07GF220J
nd R4	RESISTOR, 1K ±1%, 1/8W	EMR*	625
	RESISTOR, 3.6K ±5%, 1/4W	MIL-R-11/8	RC07GF362J
	RESISTOR, 510Ω±5%, 1/4W	MIL-R-11/8	RC07GF511J
	RESISTOR, 374Ω±1%, 1/8W	EMR*	625
	RESISTOR, 24K ±5%, 1/4W	MIL-R-11/8	RC07GF243J
	RESISTOR, 6.2K ±5%, 1/4W	MIL-R-11/8	RC07GF622J
	RESISTOR, 1.8K ±5%, 1/4W	MIL-R-11/8	RC07GF182J
and R12	RESISTOR, 10K ± 1%, 1/8W	EMR*	625
	RESISTOR, 2.2K ±5%, 1/4W	MIL-R-11/8	RC07GF222J
	RESISTOR, Same as R1		
	RESISTOR, Same as R13		
and R17	RESISTOR, 4.99K±1%, 1/8W	EMR*	625
and R19	RESISTOR, 2.49K ±1%, 1/8W	EMR*	625
	RESISTOR, 20K ±5%, 1/4W	MIL-R-11/8	RC07GF203J
	RESISTOR, 11K ±5%, 1/4W	MIL-R-11/8	RC07GF113J
	RESISTOR, 3.9K ±5%, 1/4W	MIL-R-11/8	RC07GF392J
	RESISTOR, 1.2K ±5%, 1/4W	MIL-R-11/8	RC07GF122J
	RESISTOR, 16K ±5%, 1/4W	MIL-R-11/8	RC07GF163J
	RESISTOR, Same as R5		
	RESISTOR, Same as R6		
	RESISTOR, 1K ±5%, 1/4W	MIL-R-11/8	RC07GF102J
and R29	RESISTOR, 2.49K±1%, 1/8W	EMR*	625
and R31	RESISTOR, Same as R1		
and R33	RESISTOR, 1.24K±1%, 1/8W	EMR*	625
and R35	RESISTOR, 100K ±1%, 1/8W	EMR*	625
and R37	RESISTOR, 49.9K ±1%, 1/8W	EMR*	625
	RESISTOR, Same as R22		
	RESISTOR, 1.6K ±5%, 1/4W	MIL-R-11/8	RC07GF162J
	RESISTOR, 13K ±5%, 1/4W	MIL-R-11/8	RC07GF133J
and R42	RESISTOR, 24.9K ±1%, 1/8W	EMR*	625
	RESISTOR, 220Ω ±5%, 1/4W	MIL-R-11/8	RC07GF221J
	RESISTOR, 180Ω ±5%, 1/4W	MIL-R-11/8	RC07GF181J
and R46	RESISTOR, 12.4K ±1%, 1/8W	EMR*	625
and R48	RESISTOR, 10Ω ±5%, 1/4W	MIL-R-11/8	RC07GF100J

rrelate coded number in PART NO. column with approved vendors in Table 6-19.

e 6-4 (Cont'd.). Bandpass Input Filter No. 1 Printed-Circuit Card, Parts List

JIT IOL	DESCRIPTION	MANUFACTURER	
		NAME	PART NO.
	RESISTOR, Factory adjustment, may or may not be used, ±1%, 1/8W	EMR*	625
	RESISTOR, 4.64K ±1%, 1/8W	EMR*	625
d R52	RESISTOR, 62Ω ±5%, 1/4W	MIL-R-11/8	RC07GF620J
	RESISTOR, Same as R43		
	RESISTOR, Same as R18		
	RESISTOR, 560Ω ±5%, 1/4W	MIL-R-11/8	RC07GF561J
d R57	RESISTOR, 1M ±5%, 1/4W	MIL-R-11/8	RC07GF105J
	RESISTOR, Same as R40		
d R60	RESISTOR, 510K ±5%, 1/4W	MIL-R-11/8	RC07GF514J
d R62	RESISTOR, 240K ±5%, 1/4W	MIL-R-11/8	RC07GF244J
d R64	RESISTOR, 120K ±5%, 1/4W	MIL-R-11/8	RC07GF124J
	RESISTOR, 1.47K ±1%, 1/8W	EMR*	625
	RESISTOR, 1.91K ±1%, 1/8W	EMR*	625
	RESISTOR, 3.40K ±1%, 1/8W	EMR*	625
	RESISTOR, 4.99K ±1%, 1/8W	EMR*	625
	RESISTOR, 1K ±5%, 1/4W	MIL-R-11/8	RC07GF102J
	RESISTOR, 3.3K ±5%, 1/4W	MIL-R-11/8	RC07GF332J
	RESISTOR, Same as R1		
nd R73	RESISTOR, Same as R49		
	RESISTOR, Same as R22		

relate coded number in PART NO. column with approved vendors in Table 6-19.
Table 6-4A for component values for 4140-M5.

Table 6-4A. Model 4140-M5 Bandpass Input Filter Card No. 1
Modification Parts List

CUIT BOL O.	DESCRIPTION	MANUFACTURER	
		NAME	PART NUMBER
nd C33	CAPACITOR, 40 Pf ±1%, 500V (nominal value)	EMR*	600
and C35	CAPACITOR, 140 Pf ±1%, 500V (nominal value)	EMR*	600
	RESISTOR, 2.87K ±1%, 1/8W	EMR*	625

rrelate coded number in PART NO. column with approved vendors in Table 6-19.

le 6-5. Input Printed-Circuit Card, Parts List (Ref. Figure 5-6)

JIT OL	DESCRIPTION	MANUFACTURER NAME	MANUFACTURER PART NO.
	INPUT PRINTED-CIRCUIT CARD	EMR	6472
C10	CAPACITOR, 6.8 μf ±20%, 35V	EMR*	601
	CAPACITOR, 1.0 μf ±20%, 35V	EMR*	601
	CAPACITOR, Same as C1		
	CAPACITOR, Same as C11		
	CAPACITOR, 15 Pf ±0.5 Pf, 500V	EMR*	600
	CAPACITOR, Same as C1		
	CAPACITOR, Factory adjustment, may or may not be used	EMR*	600
	CAPACITOR, Same as C1		
i C19	CAPACITOR, 22 μf ±20%, 15V	EMR*	601
	CAPACITOR, Same as C11		
	CAPACITOR, Same as C1		
	CAPACITOR, Same as C11		
u C25	CAPACITOR, Same as C1		
27, C28	CAPACITOR, 3Pf ±0.5Pf, 500V	EMR*	600
ru CR12	DIODE	General Inst.	1N914
K8	RELAY	D. Randall	12MC2A
Q3	TRANSISTOR	Motorola	MPS6521
	TRANSISTOR	Texas Inst.	2N1711
Q6	TRANSISTOR, Same as Q1		
	TRANSISTOR	Texas Inst.	2N929
Q9	TRANSISTOR	Motorola	MPS6522/ SPS2940
	TRANSISTOR, Same as Q4		
u Q14	TRANSISTOR, Same as Q1		
	TRANSISTOR, Same as Q8		
u Q20	TRANSISTOR, Same as Q1		
u Q23	TRANSISTOR, Same as Q8		
	TRANSISTOR, Same as Q1		
	TRANSISTOR	Fairchild	2N3646 or MPS3646
	TRANSISTOR	Fairchild	2N3566
	TRANSISTOR, Same as Q25		
	RESISTOR, 2.87K ±1%, 1/8W	EMR*	625
	RESISTOR, 1.54K ±1%, 1/8W	EMR*	625
	RESISTOR, 5.23K ±1%, 1/8W	EMR*	625
	RESISTOR, 2.21K ±1%, 1/8W	EMR*	625
R6	RESISTOR, 22Ω ±5%, 1/4W	MIL-R-11/8	RC07GF220J
	RESISTOR, 24K ±5%, 1/4W	MIL-R-11/8	RC07GF243J
R9	RESISTOR, Same as R5		
	RESISTOR, 1.69K ±1%, 1/8W	EMR*	625
	RESISTOR, 243Ω ±1%, 1/8W	EMR*	625
	RESISTOR, 1.96K ±1%, 1/8W	EMR*	625
	RESISTOR, 576Ω ±1%, 1/8W	EMR*	625
	RESISTOR, 3.6K ±5%, 1/4W	MIL-R-11/8	RC07GF362J
	RESISTOR, 510Ω ±5%, 1/4W	MIL-R-11/8	RC07GF511J
	RESISTOR, Same as R14		
	RESISTOR, Same as R15		
	RESISTOR, 82K ±5%, 1/4W	MIL-R-11/8	RC07GF823J
	RESISTOR, 100Ω ±5%, 1/4W	MIL-R-11/8	RC07GF101J
	RESISTOR, 1K ±5%, 1/4W	MIL-R-11/8	RC07GF102J
	RESISTOR, 4.99K ±1%, 1/8W	EMR*	625
	RESISTOR, 2.2K ±5%, 1/4W	MIL-R-11/8	RC07GF222J
	RESISTOR, 2.49K ±1%, 1/8W	EMR*	625
	RESISTOR, Same as R22		
d R26	RESISTOR, 470Ω ±5%, 1/4W	MIL-R-11/8	RC07GF471J

elate coded number in PART NO. column with approved vendors in Table 6-19.
able 6-5A for component values for the 4140-M5.

Table 6-5 (Cont'd.). Input Printed-Circuit Card, Parts List

CUIT MBOL NO.	DESCRIPTION	MANUFACTURER	
		NAME	PART NO.
	RESISTOR, Same as R19		
	RESISTOR, 100K ±5%, 1/4W	MIL-R-11/8	RC07GF104J
	RESISTOR, 18K ±5%, 1/4W	MIL-R-11/8	RC07GF183J
	RESISTOR, Same as R15		
	RESISTOR, 20K ±5%, 1/4W	MIL-R-11/8	RC07GF203J
	RESISTOR, 12K ±5%, 1/4W	MIL-R-11/8	RC07GF123J
	RESISTOR, 15K ±5%, 1/4W	MIL-R-11/8	RC07GF153J
	RESISTOR, 5.1K ±5%, 1/4W	MIL-R-11/8	RC07GF512J
	RESISTOR, 560Ω ±5%, 1/4W	MIL-R-11/8	RC07GF561J
	RESISTOR, Same as R31		
	RESISTOR, 11K ±5%, 1/4W	MIL-R-11/8	RC07GF113J
	RESISTOR, 3.9K ±5%, 1/4W	MIL-R-11/8	RC07GF392J
	RESISTOR, 1.2K ±5%, 1/4W	MIL-R-11/8	RC07GF122J
	RESISTOR, Same as R31		
	RESISTOR, Same as R37		
	RESISTOR, Same as R38		
	RESISTOR, Same as R39		
ru R47	RESISTOR, Same as R5		
	RESISTOR, 7.5K ±5%, 1/4W	MIL-R-11/8	RC07GF752J
	RESISTOR, Same as R21		
	RESISTOR, 6.2K ±5%, 1/4W	MIL-R-11/8	RC07GF622J
	RESISTOR, 1.8K ±5%, 1/4W	MIL-R-11/8	RC07GF182J
	RESISTOR, Same as R23		
	RESISTOR, Same as R14		
	RESISTOR, Same as R15		
	RESISTOR, 1K ±5%, 1/4W	MIL-R-11/8	RC07GF102J
	RESISTOR, Same as R25		
	RESISTOR, Same as R22		
	RESISTOR, 1.5K ±5%, 1/4W	MIL-R-11/8	RC07GF152J
	RESISTOR, Same as R22		
	RESISTOR, 10K ±5%, 1/4W	MIL-R-11/8	RC07GF103J
	RESISTOR, Same as R34		
	RESISTOR, Same as R60		
d R64	RESISTOR, Same as R34		
	RESISTOR, Same as R31		
	RESISTOR, Same as R60		
	RESISTOR, 27K ±5%, 1/4W	MIL-R-11/8	RC07GF273J
	RESISTOR, Same as R14		
	RESISTOR, 16K ±5%, 1/4W	MIL-R-11/8	RC07GF163J
	RESISTOR, Same as R15		
	RESISTOR, Same as R31		
	RESISTOR, Same as R37		
	RESISTOR, Same as R38		
	RESISTOR, Same as R39		
	RESISTOR, 665Ω ±1%, 1/8W	EMR*	625
	RESISTOR, 15K ±1%, 1/8W	EMR*	625
	RESISTOR, 1.78K ±1%, 1/8W	EMR*	625
	RESISTOR, Factory adjustment, may or may not be used, ±1%, 1/8W	EMR*	625
d R80	RESISTOR, Same as R5		
	RESISTOR, 1.24K ±1%, 1/8W	EMR*	625
	RESISTOR, 562Ω ±1%, 1/8W	EMR*	625
	RESISTOR, 909Ω ±1%, 1/8W	EMR*	625
	RESISTOR, 453Ω ±1%, 1/8W	EMR*	625
	RESISTOR, Same as R31	EMR*	625

elate coded number in PART NO. column with approved vendors in Table 6-19.
Table 6-5A for component values for the 4140-M5.

Table 6-5 (Cont'd.). Input Printed-Circuit Card, Parts List

CUIT MBOL NO.	DESCRIPTION	MANUFACTURER	
		NAME	PART NO.
	RESISTOR, Same as R25		
	RESISTOR, 3.3K ±5%, 1/4W	MIL-R-11/8	RC07GF332J
	RESISTOR, Same as R22		
	RESISTOR, Same as R60		
	RESISTOR, Same as R34		
	RESISTOR, Same as R60		
	RESISTOR, Same as R22		
	RESISTOR, Same as R60		
thru R96	RESISTOR, Same as R22		
	RESISTOR, Same as R34		
and R99	RESISTOR, Same as R22		

Table 6-5A. Model 4140-M5 Input Card Modification Parts List

CUIT BOL O.	DESCRIPTION	MANUFACTURER	
		NAME	PART NUMBER
	RESISTOR, 2.87K ±1%, 1/8W	EMR*	625
	RESISTOR, 806 ohms ±1%, 1/8W	EMR*	625
	RESISTOR, 2.61K ±1%, 1/8W	EMR*	625
	RESISTOR, 787 ohms ±1%, 1/8W	EMR*	625

late coded number in PART NO. column with approved vendors in Table 6-19.

Table 6-6. Bandpass Input Filter No. 2, Printed-Circuit Card, Parts List (Ref. Figure 5-8)

RCUIT MBOL NO.	DESCRIPTION	MANUFACTURER	
		NAME	PART NO.
	BANDPASS INPUT FILTER NO. 2 PRINTED-CIRCUIT CARD	EMR	6466
nd C2	CAPACITOR, Factory adjustment, may or may not be used.	EMR*	600
nd C4	CAPACITOR, 6.8 μf ±20%, 35V	EMR*	601
nd C6	CAPACITOR, Same as C1		
	CAPACITOR, Same as C3		
	CAPACITOR, 15 Pf ±0.5 Pf, 500V, nominal value	EMR*	600
	CAPACITOR, 1 μf ±20%, 35V	EMR*	601
	CAPACITOR, Same as C3		
	CAPACITOR, Same as C9	EMR*	601
thru C21	CAPACITOR, Same as C1		
and C25	CAPACITOR, Same as C1		
	CAPACITOR, Same as C1		
and C29	CAPACITOR, Same as C1		
**	CAPACITOR, 120 Pf ±1%, 500V,	EMR*	600
**	CAPACITOR, 51 Pf ±1%, 500V, nominal value	EMR*	600
	CAPACITOR, 100 Pf ±1%, 500V,	EMR*	600
**	CAPACITOR, Same as C1		
	CAPACITOR, 68 Pf ±1%, 500V, nominal value	EMR*	600
**	CAPACITOR, Same as C1		
	CAPACITOR, Same as C1	EMR*	600
	CAPACITOR, Same as C1		
	CAPACITOR, Same as C32		
	CAPACITOR, 100 Pf ±1%, 500V, nominal value	EMR*	600
	CAPACITOR, 0.269 μf ±1%, 100V (Select component value within 1/2% of value shown)	Electro-Cube	217A1B2693F
	CAPACITOR, 2500 Pf ±1%, 500V, nominal value (combine capacitors to obtain value)	EMR*	600
	CAPACITOR, 82 Pf ±1%, 500V	EMR*	600
	CAPACITOR, Same as C1		
	CAPACITOR, 0.0243 μf ±1%, 100V (Select component value within 1/2% of value shown)	Electro-Cube	217A1B2432F
	CAPACITOR, 1500 Pf ±1%, 500V, nominal value (combine capacitors to obtain value)	EMR*	600
	CAPACITOR, Same as C1		
	CAPACITOR, 110 Pf ±1%, 500V, nominal value	EMR*	600
and C49	CAPACITOR, Same as C1		
and C53	CAPACITOR, Same as C3		
	CAPACITOR, 1 Pf ±0.5 Pf, 500V	EMR*	600
	CAPACITOR, Same as C1		
	CAPACITOR, 0.151 μf ±1%, 100V (Select component value within 1/2% of value shown)	Electro-Cube	217A1B1513F
	CAPACITOR, 0.0137 μf ±1%, 100V (Select component value within 1/2% of value shown)	Electro-Cube	217A1B1372F
	CAPACITOR, Same as C3		
	CAPACITOR, Same as C1		
and CR2	DIODE	JEDEC	1N4004
and CR4	DIODE (1N816)	EMR*	663
	DIODE, Same as CR1		
	DIODE, Same as CR3		

rrelate coded number in PART NO. column with approved vendors in Table 6-19.
Table 6-6A for component values for the 4140-M5.

6-6 (Cont'd.). Bandpass Input Filter No. 2 Printed-Circuit Card, Parts List

CUIT BOL O	DESCRIPTION	MANUFACTURER	
		NAME	PART NO.
ı K13	RELAY, 12V	D. Randall	12MC2A
ru K16	RELAY, 12V	D. Randall	12MC3A
	RELAY, Same as K1		
d K19	RELAY, Same as K14		
ru K22	RELAY, Same as K1		
L2	INDUCTOR	EMR*	956
Q2	TRANSISTOR	Motorola	MPS6521
Q4	TRANSISTOR	Motorola	MPS6522/SPS 2940
Q6	TRANSISTOR, Same as Q1		
Q8	TRANSISTOR, Same as Q3		
Q10	TRANSISTOR	Motorola	MPS6515
	TRANSISTOR, Same as Q3		
ru Q14	TRANSISTOR, Same as Q9		
	TRANSISTOR, Same as Q3		
R2	RESISTOR, 22Ω ±5%, 1/4W	MIL-R-11/8	RC07GF220J
R4	RESISTOR, 1K ±1%, 1/8W	EMR*	625
	RESISTOR, 3.6K ±5%, 1/4W	MIL-R-11/8	RC07GF362J
	RESISTOR, 510Ω ±5%, 1/4W	MIL-R-11/8	RC07GF511J
	RESISTOR, 453Ω ±1%, 1/8W	EMR*	625
	RESISTOR, 24K ±5%, 1/4W	MIL-R-11/8	RC07GF243J
	RESISTOR, 6.2K ±5%, 1/4W	MIL-R-11/8	RC07GF622J
	RESISTOR, 1.8K ±5%, 1/4W	MIL-R-11/8	RC07GF182J
ıd R12	RESISTOR, 10K ±1%, 1/8W	EMR*	625
	RESISTOR, 2.2K ±5%, 1/4W	MIL-R-11/8	RC07GF222J
	RESISTOR, Same as R1		
	RESISTOR, Same as R13		
ıd R17	RESISTOR, 4.99K ±1%, 1/8W	EMR*	625
	RESISTOR, 1.27K ±1%, 1/8W	EMR*	625
	RESISTOR, 2.49K ±1%, 1/8W	EMR*	625
	RESISTOR, 20K ±5%, 1/4W	MIL-R-11/8	RC07GF203J
	RESISTOR, 11K ±5%, 1/4W	MIL-R-11/8	RC07GF113J
	RESISTOR, 3.9K ±5%, 1/4W	MIL-R-11/8	RC07GF392J
	RESISTOR, 1.2K ±5%, 1/4W	MIL-R-11/8	RC07GF122J
	RESISTOR, 16K ±5%, 1/4W	MIL-R-11/8	RC07GF163J
	RESISTOR, Same as R5		
	RESISTOR, Same as R6		
	RESISTOR, 1.0K ±5%, 1/4W	MIL-R-11/8	RC07GF102J
ıd R29	RESISTOR, 2.49K ±1%, 1/8W	EMR*	625
ıd R31	RESISTOR, Same as R1		
ıd R33	RESISTOR, 1.24K ±1%, 1/8W	EMR*	625
ıd R35	RESISTOR, 100K ±1%, 1/8W	EMR*	625
ıd R37	RESISTOR, 49.9K ±1%, 1/8W	EMR*	625
	RESISTOR, Same as R22		
	RESISTOR, 1.6K ±5%, 1/4W	MIL-R-11/8	RC07GF162J
	RESISTOR, 13K ±5%, 1/4W	MIL-R-11/8	RC07GF133J
ıd R42	RESISTOR, 24.9K ±1%, 1/8W	EMR*	625
	RESISTOR, 220Ω ±5%, 1/4W	MIL-R-11/8	RC07GF221J
	RESISTOR, Same as R22		
ıd R46	RESISTOR, 12.4K ±1%, 1/8W	EMR*	625
ıd R48	RESISTOR, 10Ω ±5%, 1/4W	MIL-R-11/8	RC07GF100J
	RESISTOR, Factory adjustment, may or may not be used; ±1%, 1/8W	EMR*	625
	RESISTOR, 3.48K ±1%, 1/8W, nominal value	EMR*	625
ıd R52	RESISTOR, 62Ω ±5%, 1/4W	MIL-R-11/8	RC07GF620J

elate coded number in PART NO. column with approved vendors in Table 6-19.

le 6-6 (Cont'd.). Bandpass Input Filter No. 2 Printed-Circuit Card Parts List

UIT BOL O.	DESCRIPTION	MANUFACTURER	
		NAME	PART NO.
	RESISTOR, 220Ω ±5%, 1/4W	MIL-R-11/8	RC07GF221J
	RESISTOR, Same as R19		
	RESISTOR, 560Ω ±5%, 1/4W	MIL-R-11/8	RC07GF561J
d R57	RESISTOR, 1 Meg ±5%, 1/4W	MIL-R-11/8	RC07GF105J
	RESISTOR, Same as R40		
d R60	RESISTOR, 510K ±5%, 1/4W	MIL-R-11/8	RC07GF514J
d R62	RESISTOR, 240K ±5%, 1/4W	MIL-R-11/8	RC07GF244J
d R64	RESISTOR, 120K ±5%, 1/4W	MIL-R-11/8	RC07GF124J
	RESISTOR, 2.00K ±1%, 1/8W	EMR*	625
	RESISTOR, Same as R50		
	RESISTOR, 7.32K ±1%, 1/8W	EMR*	625
	RESISTOR, 10K ±1%, 1/8W	EMR*	625
	RESISTOR, Same as R27		
	RESISTOR, 3.3K ±5%, 1/4W	MIL-R-11/8	RC07GF332J
	RESISTOR, Same as R1		
d R73	RESISTOR, Same as R49		

late coded number in PART NO. column with approved vendors in Table 6-19.
able 6-6A for component value for 4140-M5.

Table 6-6A. Model 4140-M5 Bandpass Input Filter No. 2 Card Modification Parts List

UIT OL .	DESCRIPTION	MANUFACTURER	
		NAME	PART NUMBER
nd C33	CAPACITOR, 85 Pf ±1%, 500V (nominal value)	EMR*	600
nd C35	CAPACITOR, 140 Pf ±1%, 500V (nominal value)	EMR*	600
	RESISTOR, 6.19K ±1%, 1/8W	EMR*	625

ate coded number in PART No. column with approved vendors in Table 6-19.

Table 6-7. Tape-Speed-Compensation Printed-Circuit Card, Parts List (Ref. Figure 5-10)

T L	DESCRIPTION	MANUFACTURER	
		NAME	PART NO.
	TAPE-SPEED-COMPENSATION PRINTED-CIRCUIT CARD	EMR	6469
	CAPACITOR, 6.8 μf ±20%, 35V	EMR*	601
	CAPACITOR, 6.8 μf ±20%, 35V (Used on Models 4140-02, 4140-04, and 4140-06 only)	EMR*	625
	CAPACITOR, 27 Pf ±.5 Pf, 500V (Used on Models 4140-02, 4140-04, and 4140-06 only)	EMR*	600
	CAPACITOR, 220 Pf ±1%, 500V (Used on Models 4140-02, 4140-04, and 4140-06 only)	EMR*	600
	CAPACITOR, Same as C1		
	CAPACITOR, 1000 Pf ±1%, 100V	EMR*	600
	CAPACITOR, 0.58 μf ±2%, 50V (Used on Models 4140-02, 4140-04, and 4140-06 only)	EMR*	905
	CAPACITOR, 0.058 μf ±2%, 50V (Used on Models 4140-02, 4140-04, and 4140-06 only)	EMR*	905
	CAPACITOR, 6560 Pf ±1%, 300V (Used on Models 4140-02, 4140-04, and 4140-06 only)	EMR*	600
	CAPACITOR, 560 Pf ±1%, 300V (Used on Models 4140-02, 4140-04, and 4140-06 only)	EMR*	600
	CAPACITOR, Same as C1		
u CR3	DIODE (1N816)	EMR*	663
K4	RELAY	D. Randall	12MC2A
K12	RELAY (Used on Models 4140-2, 4140-04, and 4140-06 only)	D. Randall	12MC1A
	RELAY, Same as K1		
ı K16	RELAY, Same as K5		
ı K20	RELAY, Same as K1		
	TRANSISTOR (Used on Models 4140-02, 4140-04, and 4140-06 only)	Motorola	MPS6522/ SPS2940
Q3	TRANSISTOR (Used on Models 4140-02, 4140-04, and 4140-06 only)	Motorola	2N3565
	TRANSISTOR, Same as Q1		
Q8	TRANSISTOR, Same as Q2		
	TRANSISTOR	Motorola	2N3565
	TRANSISTOR, Same as Q1		
	TRANSISTOR, Same as Q2		
	TRANSISTOR	Motorola	MPS6522/- SPS2940
	TRANSISTOR, Same as Q1		
	TRANSISTOR, Same as Q2		
	RESISTOR, Factory adjustment, ±1%, 1/8W	EMR*	625
	RESISTOR, 49.9K ±1%, 1/8W (Used on Models 4140-02, 4140-04, and 4140-06 only)	EMR*	625
	RESISTOR, 22Ω ±5%, 1/4W	MIL-R-11/8	RC07GF220J
	RESISTOR, 22Ω ±5%, 1/4W (Used on Models 4140-02, 4140-04, and 4140-06 only)	MIL-R-11/8	RC07GF220J

ate coded number in PART NO. column with approved vendors in Table 6-19.

6-7 (Cont'd.). Tape-Speed-Compensation Printed-Circuit Card, Parts List

UIT OL	DESCRIPTION	MANUFACTURER	
		NAME	PART NO.
	RESISTOR, 15K ±5%, 1/4W (Used on Models 4140-02, 4140-04, and 4140-06 only)	MIL-R-11/8	RC07GF153J
	RESISTOR, 1K ±5%, 1/4W (Used on Models 4140-02, 4140-04, and 4140-06 only)	MIL-R-11/8	RC07GF102J
	RESISTOR, 3.9K ±5%, 1/4W (Used on Models 4140-02, 4140-04, and 4140106 only)	MIL-R-11/8	RC07GF392J
	RESISTOR, 3K ±5%, 1/4W (Used on Models 4140-02, 4140-04, and 4140-06 only)	MIL-R-11/8	RC07GF302J
	RESISTOR, Same as R1		
	RESISTOR, 24.9K ±1%, 1/8W (Used on Models 4140-02, 4140-04, and 4140-06 only)	EMR*	625
	RESISTOR, Same as R1		
	RESISTOR, 12.4K ±1%, 1/8W (Used on Models 4140-02, 4140-04, and 4140-06 only)	EMR*	625
	RESISTOR, 3.3K ±5%, 1/4W (Used on Models 4140-02, 4140-04, and 4140-06 only)	MIL-R-11/8	RC07GF332J
	RESISTOR, 10K ±1%, 1/8W (Used on Models 4140-02, 4140-04, and 4140-06 only)	EMR*	625
	RESISTOR, Same as R5		
	RESISTOR, 6.2K ±5%, 1/4W (Used on Models 4140-02, 4140-04, and 4140-06 only)	MIL-R-11/8	RC07GF622J
	RESISTOR, 1.8K ±5%, 1/4W (Used on Models 4140-02, 4140-04, and 4140-06 only)	MIL-R-11/8	RC07GF182J
	RESISTOR, 20K ±5%, 1/4W (Used on Models 4140-02, 4140-04, and 4140-06 only)	MIL-R-11/8	RC07GF203J
	RESISTOR, 220Ω ±5%, 1/4W (Used on Models 4140-02, 4140-04, and 4140-06 only)	MIL-R-11/8	RC07GF221J
	RESISTOR, 100K ±5%, 1/4W (Used on Models 4140-02, 4140-04, and 4140-06 only)	MIL-R-11/8	RC07GF104J
	RESISTOR, Same as R5		
	RESISTOR, Same as R18		
	RESISTOR, 2.4K ±5%, 1/4W (Used on Models 4140-02, 4140-04, and 4140-06 only)	MIL-R-11/8	RC07GF242J
	POTENTIOMETER, 200Ω ±5%, 3/4 W (Used on Models 4140-02, 4140-04, and 4140-06 only)	Clarostat	76JA3-200
	RESISTOR, 649Ω ±1%, 1/8W (Used on Models 4140-02, 4140-04, and 4140-06 only)	EMR*	625
	RESISTOR, 1K ±1%, 1/8W (Used on Models 4140-01, 4140-03, and 4140-05 only)	EMR*	625
	RESISTOR, Same as R7		
	RESISTOR, 499K ±1%, 1/8W (Used on Models 4140-02, 4140-04, and 4140-06 only)	EMR*	625

late coded number in PART NO. column with approved vendors in Table 6-19.

le 6-7 (Cont'd.). Tape-Speed-Compensation Printed-Circuit Card, Parts List

UIT OL	DESCRIPTION	MANUFACTURER	
		NAME	PART NO.
	RESISTOR, Same as R3		
	RESISTOR, 249K ±1%, 1/8W (Used on Models 4140-02, 4140-04, and 4140-06 only)	EMR*	625
	RESISTOR, 8.2K ±5%, 1/4W	MIL-R-11/8	RC07GF822J
	RESISTOR, 1K ±5%, 1/4W (Used on Models 4140-02, 4140-04, and 4140-06 only)	MIL-R-11/8	RC07GF102J
	RESISTOR, Same as R5		
	RESISTOR, 124K ±1%, 1/8W (Used on Models 4140-02, 4140-04, and 4140-06 only)	EMR*	625
	RESISTOR, 61.9K ±1%, 1/8W (Used on Models 4140-02, 4140-04, and 4140-06 only)	EMR*	625
	RESISTOR, 1K ±5%, 1/4W	MIL-R-11/8	RC07GF102J
	RESISTOR, 15K ±5%, 1/4W	MIL-R-11/8	RC07GF153J
	RESISTOR, 6.81K ±1%, 1/8W	EMR*	625
	RESISTOR, Factory Adjustment, ±1%, 1/8W	EMR*	625
	RESISTOR, 14.7K ±1%, 1/8W	EMR*	625
	RESISTOR, Same as R6		
	RESISTOR, 9.1K ±5%, 1/4W (Used on Models 4140-02, 4140-04, and 4140-06 only)	MIL-R-11/8	RC07GF912J
	RESISTOR, Same as POTENTIOMETER, 10K±5%, 3/4W(Used on Models 4140-02, 4140-04, and 4140-06 only)	Clarostat	76JA3-10K
	RESISTOR, Same as R1		
	RESISTOR, 5.1 Meg ±5%, 1/4W (Used on Models 4140-02, 4140-04, and 4140-06 only)	MIL-R-11/8	RC07GF515J
	RESISTOR, 40.2K ±1%, 1/8W (Used on Models 4140-02, 4140-04, and 4140-06 only)	EMR*	625
	RESISTOR, 1.02K ±1%, 1/8W (Used on Models 4140-02, 4140-04, and 4140-06 only)	EMR*	625
	RESISTOR, 8.25K ±1%, 1/8W (Used on Models 4140-02, 4140-04, and 4140-06 only)	EMR*	625
	RESISTOR, Same as R52		
	RESISTOR, 6.19K ±1%, 1/8W (Used on Models 4140-02, 4140-04, and 4140-06 only)	EMR*	625
	RESISTOR, 2.4 Meg ±5%, 1/4W (Used on Models 4140-02, 4140-04, and 4140-06 only)	MIL-R-11/8	RC07GF245J
	RESISTOR, 1.2 Meg ±5%, 1/4W (Used on Models 4140-02, 4140-04, and 4140-06 only)	MIL-R-11/8	RC07GF125J
	RESISTOR, 620K ±5%, 1/4W (Used on Models 4140-02, 4140-04, and 4140-06 only)	MIL-R-11/8	RC07GF624J

*late coded number in PART NO. column with approved vendors in Table 6-19.

le 6-7 (Cont'd.). Tape-Speed-Compensation Printed-Circuit Card, Parts List

IT OL	DESCRIPTION	MANUFACTURER	
		NAME	PART NO.
	RESISTOR, Factory adjustment, 1%, 1/8W	EMR*	625
	RESISTOR, 4.99K ±1%, 1/8W (Used on Models 4140-02, 4140-04, and 4140-06 only)	EMR*	625
	RESISTOR, Same as R1		
	RESISTOR, Same as R1		
	RESISTOR, Same as R1		
	RESISTOR, Same as R1		

elate coded number in PART NO. column with approved vendors in Table 6-19.

Table 6-8. Limiter Printed-Circuit Card, Parts List (Ref. Figure 5-12)

CUIT MBOL IO.	DESCRIPTION	MANUFACTURER	
		NAME	PART NO.
	LIMITER PRINTED-CIRCUIT CARD	EMR	6445
nd C2	CAPACITOR, 6.8 µf ±20%, 35V	EMR*	601
nd C4	CAPACITOR, 220 µf ±20%, 10V	EMR*	601
	CAPACITOR, 22 µf ±20%, 15V	EMR*	601
	CAPACITOR, 100 µf ±20%, 20V	EMR*	601
	CAPACITOR, Same as C5		
	CAPACITOR, 10 Pf ±0.5 Pf, 500V	EMR*	600
	CAPACITOR, Same as C6		
	CAPACITOR, Same as C5		
	CAPACITOR, Same as C8		
	CAPACITOR, Same as C6		
thru C16	CAPACITOR, Same as C1		
	CAPACITOR, Same as C3		
	CAPACITOR, Same as C1		
and C20	CAPACITOR, Same as C3		
and C22	CAPACITOR, Same as C1		
	CAPACITOR, 220 Pf ±1%, 500V	EMR*	600
	CAPACITOR, 27 Pf ±0.5 Pf, 500V	EMR*	600
	CAPACITOR, 47 Pf ±0.5 Pf, 500V	EMR*	600
	CAPACITOR, Same as C6		
	CAPACITOR, 0.1 µf ±10%, 100V	EMR*	809
	CAPACITOR, 430 Pf ±1%, 500V	EMR*	600
	CAPACITOR, 0.022 µf ±10%, 100V	EMR*	809
	CAPACITOR, Same as C3		
	CAPACITOR, Same as C1		
	CAPACITOR, 1 µf ±20%, 35V	EMR*	601
thru CR3	DIODE	EMR*	903
thru CR7	DIODE	General Inst.	1N914
	DIODE	Motorola	1N942A
and CR10	DIODE, Same as CR4		
	DIODE	Motorola	1N4747A
	RELAY (used on 4140-M5 only)	Douglas Randall	12MM1C
ru Q6	TRANSISTOR	Motorola	MPS6521
ru Q12	TRANSISTOR	Motorola	MPS3646 or 2N3646
	TRANSISTOR	Motorola	MPS6522/ SPS2940
	TRANSISTOR	EMR*	666
	TRANSISTOR	Texas Inst.	2N1711
	TRANSISTOR	Motorola	2N3565
	TRANSISTOR, Same as Q13		
	TRANSISTOR, Same as Q17		
nd Q21	TRANSISTOR, Same as Q13		
hru Q28	TRANSISTOR, Same as Q17		
	TRANSISTOR	Fairchild	2N3564
nd Q31	TRANSISTOR, Same as Q17		
	TRANSISTOR, Same as Q7		
nd Q34	TRANSISTOR	Fairchild	2N3566
	RESISTOR, 1.5K ±5%, 1/4W	MIL-R-11/8	RC07GF152J
d R3	RESISTOR, 100Ω ±5%, 1/4W	MIL-R-11/8	RC07GF101J
	RESISTOR, 1.2K ±5%, 1/4W	MIL-R-11/8	RC07GF122J
	RESISTOR, 510Ω ±5%, 1/4W	MIL-R-11/8	RC07GF511J
	RESISTOR, Same as R2		
	RESISTOR, Same as R4		
	RESISTOR, Same as R5		

elate coded number in PART NO. column with approved vendor in Table 6-19.

Table 6-8 (Cont'd.) Limiter Printed-Circuit Card, Parts List

CUIT BOL O.	DESCRIPTION	MANUFACTURER	
		NAME	PART NO.
	RESISTOR, Same as R2		
	RESISTOR, Same as R4		
	RESISTOR, 3.6K ±5%, 1/4W	MIL-R-11/8	RC07GF362J
nd R13	RESISTOR, Same as R4		
	RESISTOR, 820Ω ±5%, 1/4W	MIL-R-11/8	RC07GF821J
	RESISTOR, 10K ±5%, 1/4W	MIL-R-11/8	RC07GF103J
nd R17	RESISTOR, 5.1K ±5%, 1/4W	MIL-R-11/8	RC07GF512J
	RESISTOR, Same as R2		
	RESISTOR, 2.4K ±5%, 1/4W	MIL-R-11/8	RC07GF242J
	RESISTOR, Same as R15		
	RESISTOR, 7.5K ±5%, 1/4W	MIL-R-11/8	RC07GF752J
	RESISTOR, Same as R2		
	RESISTOR, Same as R19		
	RESISTOR, Same as R15		
	RESISTOR, Same as R21		
	RESISTOR, Same as R2		
	RESISTOR, Same as R19		
	RESISTOR, 1.2K ±5%, 1/4W	MIL-R-11/8	RC07GF122J
	RESISTOR, 20K ±5%, 1/4W	MIL-R-11/8	RC07GF203J
	RESISTOR, 2.7K ±5%, 1/4W	MIL-R-11/8	RC07GF272J
	RESISTOR, Same as R29		
	RESISTOR, 330Ω ±5%, 1/4W	MIL-R-11/8	RC07GF331J
	RESISTOR, 2K ±5%, 1/4W	MIL-R-11/8	RC07GF202J
	RESISTOR, 6.2K ±5%, 1/4W	MIL-R-11/8	RC07GF622J
	RESISTOR, Same as R30		
	RESISTOR, Same as R34		
	RESISTOR, 22Ω ±5%, 1/4W	MIL-R-11/8	RC07GF220J
	RESISTOR, 3.9K ±5%, 1/4W	MIL-R-11/8	RC07GF392J
	RESISTOR, Same as R29		
	RESISTOR, Same as R38		
	RESISTOR, 3K ±5%, 1/4W	MIL-R-11/8	RC07GF302J
	RESISTOR, 15K ±5%, 1/4W	MIL-R-11/8	RC07GF153J
nd R44	RESISTOR, 1K ±5%, 1/4W	MIL-R-11/8	RC07GF102J
	RESISTOR, Same as R42		
	RESISTOR, 3.3K ±5%, 1/4W	MIL-R-11/8	RC07GF332J
	RESISTOR, 220Ω ±5%, 1/4W	MIL-R-11/8	RC07GF221J
	RESISTOR, Same as R4		
	RESISTOR, Same as R16		
	RESISTOR, 24K ±5%, 1/4W	MIL-R-11/8	RC07GF243J
nd R52	RESISTOR, Same as R46		
	RESISTOR, 9.1K ±5%, 1/4W	MIL-R-11/8	RC07GF912J
	RESISTOR, 10Ω ±10%, 1/2W	MIL-R-11/3	RC20GF100K
	RESISTOR, 2.2K ±5%, 1/4W	MIL-R-11/8	RC07GF222J
	RESISTOR, Same as R55		
	RESISTOR, Same as R46		
	RESISTOR, Same as R29		
	RESISTOR, Same as R34		
	RESISTOR, 51K ±5%, 1/4W	MIL-R-11/8	RC07GF513J
nd R62	RESISTOR, Same as R29		
	RESISTOR, Same as R47		
	RESISTOR, Same as R53		
	RESISTOR, 100K ±5%, 1/4W	MIL-R-11/8	RC07GF104J
	RESISTOR, Same as R42		
	RESISTOR, Same as R34		

Table 6-8 (Cont'd.). Limiter Printed-Circuit Card, Parts List

UIT BOL O.	DESCRIPTION	MANUFACTURER NAME	MANUFACTURER PART NO.
	RESISTOR, Same as R19		
	RESISTOR, Same as R38		
	RESISTOR, Same as R19		
	RESISTOR, 150Ω ±5%, 1/4W	MIL-R-11/8	RC07GF151J
	POTENTIOMETER, 5K ±10%, 1W	AMP-Borg Electronic	2600P-502
	RESISTOR, Same as R42		
	RESISTOR, 6.8K ±5%, 1/4W	MIL-R-11/8	RC07GF682J
	RESISTOR, Same as R55		
	RESISTOR, 8.2K ±5%, 1/4W	MIL-R-11/8	RC07GF822J
	RESISTOR, 750Ω ±1%, 1/8W	EMR*	625
	RESISTOR, 4.42K ±1%, 1/8W	EMR*	625
d R80	RESISTOR, Same as R54		

late coded number in PART NO. column with approved vendor in Table 6-19.

Table 6-9. Detector Printed-Circuit Card, Parts List (Ref. Figure 5-14)

UIT BOL).	DESCRIPTION	MANUFACTURER NAME	MANUFACTURER PART NO.
	DETECTOR PRINTED-CIRCUIT CARD	EMR	6448
C4	CAPACITOR, 50 Pf ±1%, 500V	EMR*	600
	CAPACITOR, 22 µf ±20%, 15V	EMR*	601
	CAPACITOR, 75 Pf ±1%, 500V	EMR*	600
C10	CAPACITOR, 82 Pf ±1%, 500V	EMR*	600
	CAPACITOR, 43 Pf ±0.5 Pf, 500V	EMR*	600
u C16	CAPACITOR, Same as C5		
d C18	CAPACITOR, Factory adjustment	EMR*	600
d C20	CAPACITOR, 0.1 µf +100%, −20%, 30V	Centralab	DA-104
	CAPACITOR, Same as C5		
	CAPACITOR, Same as C8		
d C24	CAPACITOR, Same as C9		
	CAPACITOR, 6.8 µf ±20%, 35V	EMR*	601
	CAPACITOR, Same as C13		
	CAPACITOR, Same as C5		
	CAPACITOR, Same as C25		
	CAPACITOR, Same as C5		
	CAPACITOR, 200 Pf ±1%, 500V	EMR*	600
	CAPACITOR, Same as C17		
	CAPACITOR, 3200 Pf ±1%, 500V, nominal value	EMR*	600
	CAPACITOR, 0.0351 µf ±1%, 100V	Dearborn	LP7A1B3512F
	CAPACITOR, Factory adjustment	EMR*	600
	CAPACITOR, 0.354 µf ±1%, 200V	EMR*	632
	CAPACITOR, Same as C30		
	CAPACITOR, Same as C17		
	CAPACITOR, Same as C32		
	CAPACITOR, Same as C33 (a)		
	CAPACITOR, Same as C33 (b)		
	CAPACITOR, Same as C34		
	CAPACITOR, Same as C25		
ru CR6	DIODE	General Inst.	1N914
	DIODE (1N751A)	EMR*	642
hru CR15	DIODE, Same as CR2		
	DIODE, Same as CR7		
	DIODE	Motorola	1N825
u K13	RELAY	D. Randall	12MC2A
ru K17	RELAY, Same as K1		
Q2	TRANSISTOR	Motorola	MPS6515
	TRANSISTOR	Raytheon	2N3010
	TRANSISTOR	Fairchild	2N3646 or MPS3646
	TRANSISTOR, Same as Q3		
Q7	TRANSISTOR	Motorola	MPS6521
	TRANSISTOR, Same as Q1		
	TRANSISTOR	Motorola	MPS6522
d Q12	TRANSISTOR, Same as Q1		
	TRANSISTOR, Same as Q3		
	TRANSISTOR, Same as Q4		
	TRANSISTOR, Same as Q3		
d Q17	TRANSISTOR, Same as Q6		
	TRANSISTOR, Same as Q1		
	TRANSISTOR, Same as Q9		

elate coded number in PART NO. column with approved vendors in Table 6-19.

Table 6-9 (Cont'd.). Detector Printed-Circuit Card, Parts List

T L	DESCRIPTION	MANUFACTURER NAME	MANUFACTURER PART NO.
2	RESISTOR, Factory adjustment, ±5%, 1/4W	MIL-R-11/8	RC07GF---J
4	RESISTOR, 1.625K ±0.25%, 1/8W	Reidon	SM-5
6	RESISTOR, 1.33K ±1%, 1/8W	EMR*	625
8	RESISTOR, 3.250K ±0.25%, 1/8W	Reidon	SM-5
10	RESISTOR, 910Ω ±5%, 1/4W	MIL-R-11/8	RC07GF911J
	RESISTOR, 300Ω ±5%, 1/4W	MIL-R-11/8	RC07GF301J
13	RESISTOR, 1.3M ±5%, 1/4W	MIL-R-11/8	RC07GF135J
15	RESISTOR, 2.2K±5%, 1/4W	MIL-R-11/8	RC07GF222J
	RESISTOR, 1.5K ±5%, 1/4W	MIL-R-11/8	RC07GF152J
18	RESISTOR, 6.50K ±0.25%, 1/8W	Reidon	SM-5
20	RESISTOR, 680Ω ±5%, 1/4W	MIL-R-11/8	RC07GF681J
	RESISTOR, 470Ω ±5%, 1/4W	MIL-R-11/8	RC07GF471J
23	RESISTOR, 5.1K ±5%, 1/4W	MIL-R-11/8	RC07GF512J
	RESISTOR, 2K ±5%, 1/4W	MIL-R-11/8	RC07GF202J
	RESISTOR, Same as R22		
	RESISTOR, 150Ω ±5%, 1/4W	MIL-R-11/8	RC07GF151J
28	RESISTOR, Same as R22		
	RESISTOR, 1K ±5%, 1/4W	MIL-R-11/8	RC07GF102J
	RESISTOR, Same as R11		
32	RESISTOR, 680K ±5%, 1/4W	MIL-R-11/8	RC07GF684J
34	RESISTOR, 13K ±0.25%, 1/8W	Reidon	SM-5
36	RESISTOR, 330K ±5%, 1/4W	MIL-R-11/8	RC07GF334J
38	RESISTOR, 16.2K ±1%, 1/8W	EMR*	625
40	RESISTOR, Same as R9		
	RESISTOR, Same as R11		
	RESISTOR, 2.4K ±5%, 1/4W	MIL-R-11/8	RC07GF242J
44	RESISTOR, 160K ±5%, 1/4W	MIL-R-11/8	RC07GF164J
46	RESISTOR, Same as R14		
	RESISTOR, Same as R16		
49	RESISTOR, 32.4K ±1%, 1/8W	EMR*	625
51	RESISTOR, Same as R19		
53	RESISTOR, 130K ±1%, 1/8W	EMR*	625
	RESISTOR, Same as R21		
56	RESISTOR, Same as R22		
	RESISTOR, Same as R24		
	RESISTOR, Same as R22		
	RESISTOR, Same as R26		
	RESISTOR, Same as R22		
	RESISTOR, Same as R11		
65	RESISTOR, 64.9K ±1%, 1/8W	EMR*	625
67	RESISTOR, 22Ω ±5%, 1/4W	MIL-R-11/8	RC07GF220J
	RESISTOR, Same as R22		
	RESISTOR, Same as R29		
72	RESISTOR, Factory adjustment, ±5%, 1/4W	MIL-R-11/8	RC07GF---J
R79	RESISTOR, 10Ω ±5%, 1/4W	MIL-R-11/8	RC07GF100J
R85	RESISTOR, Same as R1		

te coded number in PART NO. column with approved vendors in Table 6-19.

able 6-10. Voltage Switch Printed-Circuit Card, Parts List (Ref. Figure 5-16)

T L	DESCRIPTION	MANUFACTURER	
		NAME	PART NO.
	VOLTAGE SWITCH PRINTED-CIRCUIT CARD	EMR	6451
	CAPACITOR, 1 µf ±20%, 35V	EMR*	601
	CAPACITOR, 100 µf ±20%, 20V	EMR*	601
	CAPACITOR, 100 Pf ±1%, 500V	EMR*	600
	CAPACITOR, 20 Pf ±.5 Pf, 500V	EMR*	600
	CAPACITOR, 6.8 µf ±20%, 35V	EMR*	601
	CAPACITOR, 12 Pf ±.5 Pf, 500V	EMR*	600
	CAPACITOR, 22 µf ±20%, 15V	EMR*	601
	CAPACITOR, 27 Pf ±.5 Pf, 500V	EMR*	600
	CAPACITOR, 15 Pf ±.5 Pf, 500V	EMR*	600
C11	CAPACITOR, 10 Pf ±.5 Pf, 500V	EMR*	600
	CAPACITOR, Same as C7		
	CAPACITOR, 68 Pf ±1%, 500V	EMR*	600
	CAPACITOR, Same as C5		
	CAPACITOR, Same as C2		
	CAPACITOR, 470 Pf ±1%, 500V	EMR*	600
	CAPACITOR, Same as C10		
	CAPACITOR, Same as C1		
	CAPACITOR, Same as C8		
	CAPACITOR, Same as C7		
	CAPACITOR, Same as C5		
C24	CAPACITOR, Same as C8		
C28	CAPACITOR, Same as C5		
C30	CAPACITOR, Same as C2		
	CAPACITOR, 150 Pf ±1%, 500V	EMR*	600
	CAPACITOR, 0.02 µf ±10%, 100V	EMR*	809
	CAPACITOR, Same as C31		
	CAPACITOR, Same as C32		
C36	CAPACITOR, Same as C10		
C38	CAPACITOR, Same as C8		
	DIODE	Motorola	1N938A
CR5	DIODE	General Inst.	1N914
	DIODE, Same as CR1		
CR8	DIODE, Same as CR2		
	DIODE	EMR*	642
d CR11	DIODE	EMR*	663
u	DIODE, Same as CR2		
	DIODE, Same as CR9		
	DIODE	EMR*	642
	DIODE, Same as CR2		
	DIODE, Same as CR17		
u CR22	DIODE, Same as CR2		
	DIODE	JEDEC	1N4004
K4	RELAY	D. Randall	12MC2A
	RELAY	D. Randall	12MC1A
7	RELAY, Same as K1		
	RELAY (used on 4140-M5 only)	D. Randall	12MM2A
2	INDUCTOR, 47 µh	Miller	9210-60
	TRANSISTOR	Motorola	MPS6515
	TRANSISTOR	Motorola	2N3646 or MPS3646
	TRANSISTOR	Motorola	MPS6522/ SPS2940
5	TRANSISTOR	Motorola	2N3640

te coded number in PART NO. column with approved vendor in Table 6-19.

ble 6-10 (Cont'd.). Voltage Switch Printed-Circuit Card, Parts List

UIT BOL	DESCRIPTION	MANUFACTURER NAME	MANUFACTURER PART NO.
	TRANSISTOR	EMR*	666
	TRANSISTOR	Motorola	MPS6521
Q9	TRANSISTOR, Same as Q2		
	TRANSISTOR, Same as Q3		
	TRANSISTOR, Same as Q2		
	TRANSISTOR, Same as Q7		
Q15	TRANSISTOR, Same as Q3		
	TRANSISTOR, Same as Q7		
	TRANSISTOR, Same as Q3		
u Q21	TRANSISTOR, Same as Q2		
	TRANSISTOR, Same as Q3		
u Q28	TRANSISTOR	Motorola	2N3565
u Q32	TRANSISTOR	Motorola	2N3564
u Q35	TRANSISTOR, Same as Q23		
	RESISTOR, 680Ω ±5%, 1/4W	MIL-R-11/8	RC07GF681J
	RESISTOR, 390Ω ±5%, 1/4W	MIL-R-11/8	RC07GF391J
	RESISTOR, 8.2K ±5%, 1/4W	MIL-R-11/8	RC07GF822J
	RESISTOR, 1.2K ±5%, 1/4W	MIL-R-11/8	RC07GF122J
	RESISTOR, 1.5K ±5%, 1/4W	MIL-R-11/8	RC07GF152J
	RESISTOR, 8.2K ±5%, 1/4W	MIL-R-11/8	RC07GF822J
R8	RESISTOR, 15K ±1%, 1/8W	EMR*	625
	RESISTOR, 2K ±5%, 1/4W	MIL-R-11/8	RC07GF202J
	RESISTOR, 6.19K ±1%, 1/8W	EMR*	625
l R12	RESISTOR, 3.3K ±5%, 1/4W	MIL-R-11/8	RC07GF332J
	RESISTOR, 10K ±5%, 1/4W	MIL-R-11/8	RC07GF103J
	RESISTOR, 470Ω ±5%, 1/4W	MIL-R-11/8	RC07GF471J
	RESISTOR, 2.49K ±1%, 1/8W	EMR*	625
	RESISTOR, 4.3K ±5%, 1/4W	MIL-R-11/8	RC07GF432J
	RESISTOR, 1K ±5%, 1/4W	MIL-R-11/8	RC07GF102J
	RESISTOR, Same as R9		
	RESISTOR, Same as R14		
	RESISTOR, Same as R16		
	RESISTOR, Same as R15		
	RESISTOR, 56Ω ±5%, 1/4W	MIL-R-11/8	RC07GF560J
R26	RESISTOR, Same as R17		
	RESISTOR, Same as R5		
	RESISTOR, 3.6K ±5%, 1/4W	MIL-R-11/8	RC07GF362J
	POTENTIOMETER, 100Ω ±10%, 1W	Amphenol	2600P-101
	RESISTOR, Same as R24		
	RESISTOR, Same as R4		
	RESISTOR, 220Ω ±5%, 1/4W	MIL-R-11/8	RC07GF221J
	RESISTOR, Same as R24		
l R41	RESISTOR, Same as R1		
	RESISTOR, Same as R32		
	RESISTOR, Same as R1		
	RESISTOR, Same as R2		
	RESISTOR, Same as R3		
	RESISTOR, Same as R17		
	RESISTOR, 20K ±5%, 1/4W	MIL-R-11/8	RC07GF203J
	RESISTOR, Same as R15		
R50	RESISTOR, 6.8K ±5%, 1/4W	MIL-R-11/8	RC07GF682J
	RESISTOR, Same as R24		
	RESISTOR, Same as R17		
u R56	RESISTOR, Same as R14		
	RESISTOR, Same as R13		

ate coded number in PART NO. column with approved vendor in Table 6-19.
ble 6-10A for component value for 4140-M5.

ble 6-10 (Cont'd.). Voltage Switch Printed-Circuit Card, Parts List

CUIT BOL O.	DESCRIPTION	MANUFACTURER	
		NAME	PART NO.
	RESISTOR, Same as R32		
ru R61	RESISTOR, 22Ω ±5%, 1/4W	MIL-R-11/8	RC07GF220J
	RESISTOR, 0.402K ±1%, 1/8W	EMR*	625
	RESISTOR, 301K ±1%, 1/8W	EMR*	625
	RESISTOR, Same as R47		
	RESISTOR, 27K ±5%, 1/4W	MIL-R-11/8	RC07GF273J
	RESISTOR, 9.1K ±5%, 1/4W	MIL-R-11/8	RC07GF912J
	RESISTOR, Same as R47		
	RESISTOR, Same as R65		
	RESISTOR, Same as R66		
	RESISTOR, 274K ±1%, 1/8W	EMR*	625
	RESISTOR, 205K ±1%, 1/8W	EMR*	625
d R73	RESISTOR, Same as R17		
d R75	RESISTOR, 4.7K ±5%, 1/4W	MIL-R-11/8	RC07GF472J
	RESISTOR, Same as R28		
	RESISTOR, 127K ±1%, 1/8W	EMR*	625
	RESISTOR, 95.3K ±1%, 1/8W	EMR*	625
	RESISTOR, Same as R47		
	RESISTOR, Same as R13		
	RESISTOR, 6.2K ±5%, 1/4W	MIL-R-11/8	RC07GF622J
	RESISTOR, Same as R49		
	RESISTOR, Same as R47		
	RESISTOR, Same as R13		
	RESISTOR, Same as R81		
	RESISTOR, Same as R49		
	RESISTOR, 18K ±5%, 1/4W	MIL-R-11/8	RC07GF183J
	RESISTOR, 100K ±1%, 1/8W	EMR*	625
	RESISTOR, 75K ±1%, 1/8W	EMR*	625
	RESISTOR, 2.7K ±5%, 1/4W	MIL-R-11/8	RC07GF272J
	RESISTOR, Same as R13		
ru R95	RESISTOR, 8.2K ±5%, 1/4W	MIL-R-11/8	RC07GF822J
ru R99	RESISTOR, 200Ω ±5%, 1/4W	MIL-R-11/8	RC07GF201J
and	RESISTOR, (used for 4140-M5 only		

elate coded number in PART NO. column with approved vendor in Table 6-19.
able 6-10A for component value for 4140-M5.

Table 6-10A. Model 4140-M5 Voltage Switch Card Modification Parts List

CUIT MBOL NO.	DESCRIPTION	MANUFACTURER	
		NAME	PART NUMBER
	RESISTOR, 3.09K ±1%, 1/8W	EMR*	625
	RESISTOR, 205K ±1%, 1/8W	EMR*	625
	RESISTOR, 147K ±1%, 1/8W	EMR*	625
	RESISTOR, 75K ±1%, 1/8W	EMR*	625
	RESISTOR, 100K ±1%, 1/8W	EMR*	625

late coded number in PART NO. column with approved vendors in Table 6-19.

e 6-11. Low-Pass Output Filter Single-Pole Printed-Circuit Card, Parts List (Ref. Figure 5-18)

UIT BOL O.	DESCRIPTION	MANUFACTURER	
		NAME	PART NO.
	LOW-PASS OUTPUT FILTER SINGLE-POLE PRINTED-CIRCUIT CARD	EMR	6457
C2	CAPACITOR, 22 µf ±20%, 15V	EMR*	601
C5	CAPACITOR, 6.8 µf ±20%, 35V	EMR*	601
	CAPACITOR, Factory adjustment, may or may not be used		
	CAPACITOR, 0.0619 µf ±2%, 50V (Used on Models 4140-05 and 4140-06 only)	EMR*	905
	CAPACITOR, 0.0581 µf ±2%, 50V (Used on Models 4140-03 and 4140-04 only)	EMR*	905
	CAPACITOR, 0.0500 µf ±2%, 50V (Used on Models 4140-01 and 4140-02 only)	EMR*	905
	CAPACITOR, 0.681 µf ±2%, 50V (Used on Models 4140-05 and 4140-06 only)	EMR*	905
	CAPACITOR, 0.640 µf ±2%, 50V (Used on Models 4140-03 and 4140-04 only)	EMR*	905
	CAPACITOR, 0.550 µf ±2%, 50V (Used on Models 4140-01 and 4140-02 only)	EMR*	905
	CAPACITOR, Same as C6		
	CAPACITOR, 9.6 µf ±5%, 20V (Used on Models 4140-05 and 4140-06 only)	EMR*	601
	CAPACITOR, 10.4 µf ±5%, 20V (Used on Models 4140-03 and 4140-04 only)	EMR*	601
	CAPACITOR, 12.0 µf ±5%, 20V (Used on Models 4140-01 and 4140-02 only)	EMR*	601
	CAPACITOR, Same as C6		
	CAPACITOR, 13.6 µf ±5%, 20V (Used on Models 4140-05 and 4140-06 only)	EMR*	601
	CAPACITOR, 13.0 µf ±5%, 20V (Used on Models 4140-03 and 4140-04 only)	EMR*	601
	CAPACITOR, 11.0 µf ±5%, 20V (Used on Models 4140-01 and 4140-02 only)	EMR*	601
C14	CAPACITOR, Same as C6		
	CAPACITOR, 0.0427 µf ±2%, 50V (Used on Models 4140-05 and 4140-06 only)	EMR*	905
	CAPACITOR, 0.0470 µf ±2%, 50V (Used on Models 4140-03 and 4140-04 only)	EMR*	905
	CAPACITOR, 0.0540 µf ±2%, 50V (Used on Models 4140-01 and 4140-02 only)	EMR*	905
	CAPACITOR, 0.469 µf ±2%, 50V (Used on Models 4140-05 and 4140-06 only)	EMR*	905
	CAPACITOR, 0.517 µf ±2%, 50V (Used on Models 4140-03 and 4140-04 only)	EMR*	905
	CAPACITOR, 0.594 µf ±2%, 50V (Used on Models 4140-01 and 4140-02 only)	EMR*	905
	CAPACITOR, Factory adjustment, may or may not be used.	EMR*	600
	CAPACITOR, Same as C10		
	CAPACITOR, Same as C17		
	CAPACITOR, Same as C12		
	CAPACITOR, Same as C17		
	CAPACITOR, 4300 Pf ±1%, 500V (Used on Models 4140-05 and 4140-06 only)	EMR*	600
	CAPACITOR, 4700 Pf ±1%, 500V (Used on Models 4140-03 and 4140-04 only)	EMR*	600
	CAPACITOR, 5400 Pf ±1%, 300V (Used on Models 4140-01 and 4140-02 only)	EMR*	600
	CAPACITOR, Same as C17		

late coded number in PART NO. column with approved vendors in Table 6-19.

11 (Cont'd.). Low-Pass Output Filter Single-Pole Printed-Circuit Card, Parts List

UIT OL	DESCRIPTION	MANUFACTURER	
		NAME	PART NO.
	CAPACITOR, 6200 Pf ±1%, 300V (Used on Models 4140-05 and 4140-06 only)	EMR*	600
	CAPACITOR, 5800 Pf ±1%, 300V (Used on Models 4140-03 and 4140-04 only)	EMR*	600
	CAPACITOR, 5000 Pf ±1%, 300V (Used on Models 4140-01 and 4140-02 only)	EMR*	600
	CAPACITOR, Same as C17		
	CAPACITOR, 560 Pf ±1%, 500V (Used on Models 4140-05 and 4140-06 only)	EMR*	600
	CAPACITOR, 510 Pf ±1%, 500V (Used on Models 4140-03 and 4140-04 only)	EMR*	600
	CAPACITOR, 470 Pf ±1%, 500V (Used on Models 4140-01 and 4140-02 only)	EMR*	600
	CAPACITOR, Factory adjustment	EMR*	600
	CAPACITOR, 260 Pf ±1%, 500V (Used on Models 4140-05 and 4140-06 only)	EMR*	600
	CAPACITOR, 430 Pf ±1%, 500V (Used on Models 4140-03 and 4140-04 only)	EMR*	600
	CAPACITOR, 510 Pf ±1%, 500V (Used on Models 4140-01 and 4140-02 only)	EMR*	600
	CAPACITOR, 10 Pf ±0.5 Pf, 500V (Used on Models 4140-05 and 4140-06 only)	EMR*	600
	CAPACITOR, 21 Pf ±0.5 Pf, 500V (Used on Models 4140-03 and 4140-04 only)	EMR*	600
	CAPACITOR, Factory adjustment (Used on Models 4140-01 and 4140-02 only)	EMR*	600
	CAPACITOR, Same as C27		
	CAPACITOR, Factory adjustment, ±5%, 500V (Used on Models 4140-03, 4140-04, 4140-05, and 4140-06 only)	EMR*	600
	CAPACITOR, 20 Pf ±5%, 500V (Used on Models 4140-01 and 4140-02 only)	EMR*	600
	CAPACITOR, 33 Pf ±0.5 Pf, 500V (Used on Models 4140-05 and 4140-06 only)	EMR*	600
	CAPACITOR, 21 Pf ±0.5 Pf, 500V (Used on Models 4140-03 and 4140-04 only)	EMR*	600
	CAPACITOR, 15 Pf ±0.5 Pf, 500V (Used on Models 4140-01 and 4140-02 only)	EMR*	600
	CAPACITOR, Factory adjustment, may or may not be used, ±5%, 500V	EMR*	600
CR6	DIODE	JEDEC	1N4004
K6	RELAY, 12V	D. Randall	12MC1A
K9	RELAY, 12V	D. Randall	12MC2A
K15	RELAY, Same as K1		
	RELAY, Same as K7		
K18	RELAY, Same as K1		
	RELAY, Same as K7		
Q3	TRANSISTOR	Motorola	MPS6521
	TRANSISTOR	Motorola	MPS6522/-SPS2940
	RESISTOR, 4.99K ±1%, 1/8W	EMR*	625
	RESISTOR, 22Ω ±5%, 1/4W	MIL-R-11/8	RC07GF220J
	RESISTOR, 470Ω ±5%, 1/4W	MIL-R-11/8	RC07GF471J
	RESISTOR, 1K ±5%, 1/4W	MIL-R-11/8	RC07GF102J
	RESISTOR, 240K ±5%, 1/4W	MIL-R-11/8	RC07GF244J

ate coded number in PART NO. column with approved vendors in Table 6-19.

11 (Cont'd.). Low-Pass Output Filter Single-Pole Printed-Circuit Card, Parts List

UIT OL	DESCRIPTION	MANUFACTURER	
		NAME	PART NO.
	RESISTOR, 510K ±5%, 1/4W	MIL-R-11/8	RC07GF514J
	RESISTOR, 3.6K ±5%, 1/4W	MIL-R-11/8	RC07GF362J
	RESISTOR, 270Ω ±5%, 1/4W	MIL-R-11/8	RC07GF271J
	RESISTOR, 20K ±5%, 1/4W	MIL-R-11/8	RC07GF203J
	RESISTOR, 5.1K ±5%, 1/4W	MIL-R-11/8	RC07GF512J
	RESISTOR, 820Ω ±5%, 1/4W	MIL-R-11/8	RC07GF821J
	RESISTOR, 1 Meg ±5%, 1/4W	MIL-R-11/8	RC07GF105J
	RESISTOR, 2 Meg ±5%, 1/4W	MIL-R-11/8	RC07GF205J
	RESISTOR, 11K ±5%, 1/4W	MIL-R-11/8	RC07GF113J
	RESISTOR, Same as R2		
	RESISTOR, 24.9K ±1%, 1/8W	EMR*	625
	RESISTOR, 49.9K ±1%, 1/8W	EMR*	625
	RESISTOR, 100K ±1%, 1/8W	EMR*	625
	RESISTOR, 200K ±1%, 1/8W	EMR*	625
	RESISTOR, 2.49K ±1%, 1/8W	EMR*	625
	RESISTOR, Same as R1		
	RESISTOR, 10K ±1%, 1/8W	EMR*	625
	RESISTOR, 20K ±1%, 1/8W	EMR*	625

ate coded number in PART NO. column with approved vendors in Table 6-19.

6-12. Low-Pass Output Filter Pole-Pair Printed-Circuit Card, Parts List (Ref. Figure 5-20)

DESCRIPTION	MANUFACTURER	
	NAME	PART NO.
LOW-PASS OUTPUT FILTER POLE-PAIR PRINTED-CIRCUIT CARD	EMR	7525
CAPACITOR, 6.8 µf ±20%, 35V	EMR*	601
CAPACITOR, 15 Pf ±.5pf,500V	EMR*	600
CAPACITOR, Factory adjustment	EMR*	600
CAPACITOR, 82 Pf ±1%, 500V (Used on Models 4140-01, 4140-02, 4140-05 and 4140-06 only)	EMR*	600
CAPACITOR, 68 Pf ±1%, 500V (Used on Models 4140-03 and 4140-04 only)	EMR*	600
CAPACITOR, 27 Pf ±.5pf,500V	EMR*	600
CAPACITOR, Same as C3		
CAPACITOR, 0.00954 µf ±2%, 50V	EMR*	905
CAPACITOR, Same as C4		
CAPACITOR, 0.0351 µf ±2%, 50V (Used on Models 4140-05 and 4140-06 only)	EMR*	905
CAPACITOR, 0.0297 µf ±2%, 50V (Used on Models 4140-03 and 4140-04 only)	EMR*	905
CAPACITOR, 0.027 µf ±2%, 50V (Used on Models 4140-01 and 4140-02 only)	EMR*	905
CAPACITOR, Same as C1		
CAPACITOR, 950 Pf ±.5pf,500V (Used on Models 4140-01, 4140-02, 4140-05 and 4140-06 only)	EMR*	600
CAPACITOR, 890 Pf ±1%, 500V (Used on Models 4140-03 and 4140-04 only)	EMR*	600
CAPACITOR, Same as C4		
CAPACITOR, 3500 Pf ±1%, 500V (Used on Models 4140-05 and 4140-06 only)	EMR*	600
CAPACITOR, 2950 Pf ±1%, 500V (Used on Models 4140-03 and 4140-04 only)	EMR*	600
CAPACITOR, 2700 Pf ±1%, 500V (Used on Models 4140-01 and 4140-02 only)	EMR*	600
CAPACITOR, Same as C4		
CAPACITOR, 300 Pf ±1%, 500V (Used on Models 4140-05 and 4140-06 only)	EMR*	600
CAPACITOR, 215 Pf ±1%, 500V (Used on Models 4140-03 and 4140-04 only)	EMR*	600
CAPACITOR, 230 Pf ±1%, 500V (Used on Models 4140-01 and 4140-02 only)	EMR*	600
CAPACITOR, Same as C4		
CAPACITOR, 15 Pf ±0.5 Pf, 500V (Used on on Models 4140-01, 4140-02, 4140-03, and 4140-04 only)	EMR*	600
CAPACITOR, 15 Pf ±.5 Pf, 500V (Used on Models 4140-05 and 4140-06 only)	EMR*	600
CAPACITOR, Same as C1		
CAPACITOR, 0.351 µf ±2%, 50V (Used on Models 4140-05 and 4140-06 only)	EMR*	905
CAPACITOR, 0.297 µf ±2%, 50V (Used on Models 4140-03 and 4140-04 only)	EMR*	905
CAPACITOR, 0.270 µf ±2%, 50V (Used on Models 4140-01 and 4140-02 only)	EMR*	905
CAPACITOR, 0.0954 µf ±2%, 50V	EMR*	905
CAPACITOR, 3.86 µf ±2%, 50V (Used on Models 4140-05 and 4140-06 only)	EMR*	905
CAPACITOR, 3.27 µf ±2%, 50V (Used on Models 4140-03 and 4140-04 only)	EMR*	905

*coded number in PART NO. column with approved vendor in Table 6-19.

-12 (Cont'd.). Low-Pass Output Filter Pole-Pair Printed-Circuit Card, Parts List

UIT BOL O.	DESCRIPTION	MANUFACTURER NAME	MANUFACTURER PART NO.
	CAPACITOR, 2.97 μf ±2%, 50V (Used on Models 4140-01 and 4140-02 only)	EMR*	905
	CAPACITOR, 1.05 μf ±2%, 50V	EMR*	905
C34	CAPACITOR, Same as C4		
CR6	DIODE	JEDEC	1N4004
K19	RELAY, 12V	D. Randall	12MC2A
L3	INDUCTOR, 47 μh	Miller	9210-60
Q3	TRANSISTOR	Motorola	MPS6521
Q6	TRANSISTOR	Motorola	MPS6522/SPS 2940
	TRANSISTOR, Same as Q1		
	TRANSISTOR, Same as Q4		
10	TRANSISTOR, Same as Q1		
Q13	TRANSISTOR, Same as Q4		
	TRANSISTOR, Same as Q1		
	RESISTOR, 270Ω ±5%, 1/4W	MIL-R-11/8	RC07GF271J
	RESISTOR, 220Ω ±5%, 1/4W	MIL-R-11/8	RC07GF221J
	RESISTOR, Same as R1		
	RESISTOR, Same as R2		
6	RESISTOR, 10K ±1%, 1/8W	EMR*	625
8	RESISTOR, 1.24K ±1%, 1/8W	EMR*	625
10	RESISTOR, 124K ±1%, 1/8W	EMR*	625
R12	RESISTOR, 1 Meg ±5%, 1/4W	MIL-R-11/8	RC07GF105J
R14	RESISTOR, 4.99K ±1%, 1/8W	EMR*	625
R16	RESISTOR, 100K ±1%, 1/8W	EMR*	625
R18	RESISTOR, 249K ±1%, 1/8W	EMR*	625
R20	RESISTOR, 12.4K ±1%, 1/8W	EMR*	625
	RESISTOR, 20K ±5%, 1/4W	MIL-R-11/8	RC07GF203J
R23	RESISTOR, 10K ±5%, 1/4W	MIL-R-11/8	RC07GF103J
	RESISTOR, 1.1K ±5%, 1/4W	MIL-R-11/8	RC07GF112J
	RESISTOR, 15K ±5%, 1/4W	MIL-R-11/8	RC07GF153J
	RESISTOR, Same as R22		
	RESISTOR, 5.1K ±5%, 1/4W	MIL-R-11/8	RC07GF512J
	RESISTOR, 560Ω ±5%, 1/4W	MIL-R-11/8	RC07GF561J
R30	RESISTOR, 2.49K ±1%, 1/8W	EMR*	625
R32	RESISTOR, 49.9K ±1%, 1/8W	EMR*	625
R34	RESISTOR, 499 K ±1%, 1/8W	EMR*	625
R36	RESISTOR, 24.9K ±1%, 1/8W	EMR*	625
R38	RESISTOR, Same as R13		
	RESISTOR, 200Ω ±5%, 1/4W	MIL-R-11/8	RC07GF201J
	RESISTOR, Same as R24		
	RESISTOR, 3.9K ±5%, 1/4W	MIL-R-11/8	RC07GF392J
	RESISTOR, Same as R39		
	RESISTOR, Same as R1		
	RESISTOR, Same as R2		
	RESISTOR, 9.31K ±1%, 1/8W (Used on Models 4140-05 and 4140-06 only)	EMR*	625
	RESISTOR, 10.2K ±1%, 1/8W (Used on Models 4140-03 and 4140-04 only)	EMR*	625
	RESISTOR, 12.1K ±1%, 1/8W (Used on Models 4140-01 and 4140-02 only)	EMR*	625
	RESISTOR, 3.16K ±1%, 1/8W (Used on Models 4140-05 and 4140-06 only)	EMR*	625
	RESISTOR, 3.57K ±1%, 1/8W (Used on Models 4140-03 and 4140-04 only)	EMR*	625

te coded number in PART NO. column with approved vendor in Table 6-19.

12 (Cont'd.). Low-Pass Output Filter Pole-Pair Printed-Circuit Card, Parts List

IT OL	DESCRIPTION	MANUFACTURER	
		NAME	PART NO.
	RESISTOR, 909Ω ±1%, 1/8W (Used on Models 4140-01 and 4140-02 only)	EMR*	625
	RESISTOR, 15K ±1%, 1/8W (Used on Models 4140-05 and 4140-06 only)	EMR*	625
	RESISTOR, 17.8K ±1%, 1/8W (Used on Models 4140-01 and 4140-02 only)	EMR*	625
	RESISTOR, 523Ω ±1%, 1/8W (Used on Models 4140-05 and 4140-06 only)	EMR*	625
	RESISTOR, 232Ω ±1%, 1/8W (Used on Models 4140-03 and 4140-04 only)	EMR*	625
	RESISTOR, 2.15K ±1%, 1/8W (Used on Models 4140-01 and 4140-02 only)	EMR*	625
	RESISTOR, Same as R13		
	RESISTOR, 6.2K ±5%, 1/4W	MIL-R-11/8	RC07GF622J
	RESISTOR, Same as R13		
	RESISTOR, 16K ±5%, 1/4W	MIL-R-11/8	RC07GF163J
	RESISTOR, 24K ±5%, 1/4W	MIL-R-11/8	RC07GF243J
	RESISTOR, Same as R52		
	RESISTOR, 8.2K ±5%, 1/4W	MIL-R-11/8	RC07GF822J
	RESISTOR, 1K ±5%, 1/4W	MIL-R-11/8	RC07GF102J
	RESISTOR, Same as R21		
59	RESISTOR, Same as R22		
	RESISTOR, Same as R24		

e coded number in PART NO. column with approved vendor in Table 6-19.

e 6-13. Low-Pass Output Filter Pole-Pair Printed-Circuit Card, Parts List (Ref. Figure 5-22)

IT OL	DESCRIPTION	MANUFACTURER NAME	MANUFACTURER PART NO.
	LOW-PASS OUTPUT FILTER POLE-PAIR PRINTED-CIRCUIT CARD (Used on Models 4140-03, 4140-04, 4140-05, and 4140-06 only)	EMR	7526
2	CAPACITOR, 6.8 µf ±20%, 35V	EMR*	601
	CAPACITOR, 15 Pf ±0.5 Pf, 500V	EMR*	600
	CAPACITOR, Factory adjustment, may or may not be used	EMR*	600
	CAPACITOR, 27 Pf ±0.5 Pf, 500V	EMR*	600
	CAPACITOR, Same as C3		
	CAPACITOR, 0.00954 µf ±2%, 50V	EMR*	905
	CAPACITOR, Factory adjustment, may or may not be used		
	CAPACITOR, 0.027 µf ±2%, 50V (Used on Models 4140-05 and 4140-06 only)	EMR*	905
	CAPACITOR, 0.0297 µf ±2%, 50V (Used on Models 4140-03 and 4140-04 only)	EMR*	905
	CAPACITOR, Same as C1		
	CAPACITOR, 950 Pf ±1%, 500V	EMR*	600
	CAPACITOR, Same as C9		
	CAPACITOR, 2680 Pf ±1%, 500V (Used on Models 4140-05 and 4140-06 only)	EMR*	600
	CAPACITOR, 2880 Pf ±1%, 500V (Used on Models 4140-03 and 4140-04 only)	EMR*	600
	CAPACITOR, Same as C4		
C21	CAPACITOR, Same as C4		
	CAPACITOR, Same as C1		
	CAPACITOR, 0.270 µf ±2%, 50V (Used on Models 4140-05 and 4140-06 only)	EMR*	905
	CAPACITOR, 0.297 µf ±2%, 50V (Used on Models 4140-03 and 4140-04 only)	EMR*	905
	CAPACITOR, 0.0954 µf ±2%, 50V	EMR*	905
	CAPACITOR, 2.97 µf ±2%, 50V (Used on Models 4140-05 and 4140-06 only)	EMR*	905
	CAPACITOR, 3.27 µf ±2%, 50V (Used on Models 4140-03 and 4140-04 only)	EMR*	905
	CAPACITOR, 1.05 µf ±2%, 50V	EMR*	905
	CAPACITOR, 30 µf ±5%, 10V (Used on Models 4140-05 and 4140-06 only; this value used when C32 not used)	Kemet or Sprague	K30N10DNS or 151D306 X5010Y2
	CAPACITOR, 68µf ±10%, 20V	EMR*	601
	CAPACITOR, 22µf, ±10%, 35V	EMR *	601
C42	CAPACITOR, Factory adjustment		
	CAPACITOR, 56µf ±10%, 20V (Used on Models 4140-05 and 4140-06 only)	EMR*	601
	CAPACITOR, 68 µf±10%, 20V (Used on Models 4140-03 and 4140-04 only)	EMR*	601
	CAPACITOR, Same as C33		
CR6	DIODE	JEDEC	1N4004
K14	RELAY, 12 V	D. Randall	12MC2A
K16	RELAY, 12 V	D. Randall	12MC2C
K21	RELAY, 12 V	D. Randall	12MC2A
	RELAY, 12 V	D. Randall	12MC2C
3	INDUCTOR, 47 µh	Miller	9210-60

te coded number in PART NO. column with approved vendors in Table 6-19.

6-13 (Cont'd.). Low-Pass Output Filter Pole-Pair Printed-Circuit Card, Parts List

CUIT MBOL 40.	DESCRIPTION	MANUFACTURER	
		NAME	PART NO.
ru Q3	TRANSISTOR	Motorola	MPS6521
ru Q6	TRANSISTOR	Motorola	MPS6522/-SPS2940
	TRANSISTOR, Same as Q1		
	TRANSISTOR, Same as Q4		
l Q10	TRANSISTOR, Same as Q1		
ıru Q13	TRANSISTOR, Same as Q4		
	TRANSISTOR, Same as Q1		
	RESISTOR, 270Ω ±5%, 1/4W	MIL-R-11/8	RC07GF271J
	RESISTOR, 220Ω ±5%, 1/4W	MIL-R-11/8	RC07GF221J
	RESISTOR, Same as R1		
	RESISTOR, Same as R2		
d R6	RESISTOR, 10.0K ±1%, 1/8W	EMR*	625
d R8	RESISTOR, 1.24K ±1%, 1/8W	EMR*	625
d R10	RESISTOR, 124K ±1%, 1/8W	EMR*	625
nd R12	RESISTOR, 1M ±5%, 1/4W	MIL-R-11/8	RC07GF105J
nd R14	RESISTOR, 4.99K ±1%, 1/8W	EMR*	625
nd R16	RESISTOR, 100K ±1%, 1/8W	EMR*	625
nd R18	RESISTOR, 249K ±1%, 1/8W	EMR*	625
nd R20	RESISTOR, 12.4K ±1%, 1/8W	EMR*	625
	RESISTOR, 20K ±5%, 1/4W	MIL-R-11/8	RC07GF203J
nd R23	RESISTOR, 10K ±5%, 1/4W	MIL-R-11/8	RC07GF103J
	RESISTOR, 1.1K ±5%, 1/4W	MIL-R-11/8	RC07GF112J
	RESISTOR, 15K ±5%, 1/4W	MIL-R-11/8	RC07GF153J
	RESISTOR, Same as R22		
	RESISTOR, 5.1K ±5%, 1/4W	MIL-R-11/8	RC07GF512J
	RESISTOR, 560Ω ±5%, 1/4W	MIL-R-11/8	RC07GF561J
nd R30	RESISTOR, 2.49K ±1%, 1/8W	EMR*	625
nd R32	RESISTOR, 49.9K ±1%, 1/8W	EMR*	625
nd R34	RESISTOR, 499K ±1%, 1/8W	EMR*	625
nd R36	RESISTOR, 24.9K ±1%, 1/8W	EMR*	625
nd R38	RESISTOR, Same as R13		
	RESISTOR, 200Ω ±5%, 1/4W	MIL-R-11/8	RC07GF201J
	RESISTOR, Same as R24		
	RESISTOR, 3.9K ±5%, 1/4W	MIL-R-11/8	RC07GF392J
	RESISTOR, Same as R39		
	RESISTOR, Same as R1		
	RESISTOR, Same as R2		
	RESISTOR, 9.76K ±1%, 1/8W (Used on Models 4140-05 and 4140-06 only)	EMR*	625
	RESISTOR, 10.2K ±1%, 1/8W (Used on Models 4140-03 and 4140-04 only)	EMR*	625
	RESISTOR, 3.57K ±1%, 1/8W (Used on Models 4140-05 and 4140-06 only)	EMR*	625
	RESISTOR, 866Ω ±1%, 1/8W (Used on Models 4140-03 and 4140-04 only)	EMR*	625
	RESISTOR, 23.2K ±1%, 1/8W (Used on Models 4140-05 and 4140-06 only)	EMR*	625

elate coded number in PART NO. column with approved vendors in Table 6-19.

-13 (Cont'd.). Low-Pass Output Filter Pole-Pair Printed-Circuit Card, Parts List

JIT IOL	DESCRIPTION	MANUFACTURER NAME	MANUFACTURER PART NO.
	RESISTOR, 68.1K ±1%, 1/8W (Used on Models 4140-03 and 4140-04 only)	EMR*	625
	RESISTOR, 422Ω ±1%, 1/8W (Used on Models 4140-05 and 4140-06 only)	EMR*	625
	RESISTOR, 4.22K ±1%, 1/8W (Used on Models 4140-03 and 4140-04 only)	EMR*	625
	RESISTOR, Same as R13		
	RESISTOR, 6.2K ±5%, 1/4W	MIL-R-11/8	RC07GF622J
	RESISTOR, Same as R13		
	RESISTOR, 16K ±5%, 1/4W	MIL-R-11/8	RC07GF163J
	RESISTOR, 24K ±5%, 1/4W	MIL-R-11/8	RC07GF243J
	RESISTOR, Same as R52		
	RESISTOR, 8.2K ±5%, 1/4W	MIL-R-11/8	RC07GF822J
	RESISTOR, 1.0K ±5%, 1/4W	MIL-R-11/8	RC07GF102J
	RESISTOR, Same as R21		
i R59	RESISTOR, Same as R22		
	RESISTOR, Same as R24		
u R64	RESISTOR, Factory Adjustment		

late coded number in PART NO. column with approved vendors in Table 6-19.

able 6-14. Low-Pass Output Filter Pole-Pair Printed-Circuit Card, Parts List (Ref. Figure 5-24)

CUIT BOL O	DESCRIPTION	MANUFACTURER	
		NAME	PART NO.
	LOW-PASS OUTPUT FILTER POLE-PAIR PRINTED-CIRCUIT CARD (Used on Models 4140-05 and 4140-06 only)	EMR	7527
C2	CAPACITOR, 6.8 µf ±20%, 35V	EMR*	601
C4	CAPACITOR, Factory adjustment, may or may not be used	EMR*	600
	CAPACITOR, 27 Pf ±0.5 Pf, 500V	EMR*	600
	CAPACITOR, 15 Pf ±0.5 Pf, 500V	EMR*	600
	CAPACITOR, 0.00992 µf ±2%, 500V	EMR*	905
	CAPACITOR, 0.0297 µf ±2%, 50V	EMR*	905
	CAPACITOR, Same as C1		
	CAPACITOR, 990 Pf ±1%, 500V	EMR*	600
	CAPACITOR, 2970 Pf ±1%, 500V	EMR*	600
d C21	CAPACITOR, Same as C3		
	CAPACITOR, Same as C1		
	CAPACITOR, 0.297 µf ±2%, 50V	EMR*	905
	CAPACITOR, 0.099 µf ±2%, 50V	EMR*	905
	CAPACITOR, 3.27 µf ±2%, 50V	EMR*	905
	CAPACITOR, 1.09 µf ±2%, 50V	EMR*	905
	CAPACITOR, 68 µf ±10%, 20V	EMR*	601
	CAPACITOR, 22 µf ±10%, 35V	EMR*	601
ru C42	CAPACITOR, Factory adjustment		
	CAPACITOR, Same as C31		
	CAPACITOR, Same as C33		
ru CR6	DIODE	JEDEC	1N4004
u K14	RELAY, 12V	D. Randall	12MC2A
d K16	RELAY, 12V	D. Randall	12MC2C
ru K21	RELAY, 12V	D. Randall	12MC2A
	RELAY, 12V	D. Randall	12MC2C
u L3	INDUCTOR, 47 µh	J. W. Miller	9210-60
u Q3	TRANSISTOR	Motorola	MPS6521
u Q6	TRANSISTOR	Motorola	MPS6522/-SPS2940
	TRANSISTOR, Same as Q1		
	TRANSISTOR, Same as Q4		
Q10	TRANSISTOR, Same as Q1		
ru Q13	TRANSISTOR, Same as Q4		
	TRANSISTOR, Same as Q1		
	RESISTOR, 270Ω ±5%, 1/4W	MIL-R-11/8	RC07GF271J
	RESISTOR, 220Ω ±5%, 1/4W	MIL-R-11/8	RC07GF221J
	RESISTOR, Same as R1		
	RESISTOR, Same as R2		
R6	RESISTOR, 10.0K ±1%, 1/8W	EMR*	625
R8	RESISTOR, 1.24K ±1%, 1/8W	EMR*	625
R10	RESISTOR, 124K ±1%, 1/8W	EMR*	625
d R12	RESISTOR, 1M ±5%, 1/4W	MIL-R-11/8	RC07GF105J
d R14	RESISTOR, 4.99K ±1%, 1/8W	EMR*	625
d R16	RESISTOR, 100K ±1%, 1/8W	EMR*	625
d R18	RESISTOR, 249K ±1%, 1/8W	EMR*	625
d R20	RESISTOR, 12.4K ±1%, 1/8W	EMR*	625
	RESISTOR, 20K ±5%, 1/4W	MIL-R-11/8	RC07GF203J
d R23	RESISTOR, 10K ±5%, 1/4W	MIL-R-11/8	RC07GF103J
	RESISTOR, 1.1K ±5%, 1/4W	MIL-R-11/8	RC07GF112J
	RESISTOR, 15K ±5%, 1/4W	MIL-R-11/8	RC07GF153J
	RESISTOR, Same as R22		
	RESISTOR, 5.1K ±5%, 1/4W	MIL-R-11/8	RC07GF512J

elate coded number in PART NO. column with approved vendors in Table 6-19.

5-14 (Con't.). Low-Pass Output Filter Pole-Pair Printed-Circuit Card, Parts List

CUIT BOL O.	DESCRIPTION	MANUFACTURER	
		NAME	PART NO.
	RESISTOR, 560Ω ±5%, 1/4W	MIL-R-11/8	RC07GF561J
d R30	RESISTOR, 2.49K ±1%, 1/8W	EMR*	625
d R32	RESISTOR, 49.9K ±1%, 1/8W	EMR*	625
d R34	RESISTOR, 499K ±1%, 1/8W	EMR*	625
d R36	RESISTOR, 24.9K ±1%, 1/8W	EMR*	625
d R38	RESISTOR, Same as R13		
	RESISTOR, 200Ω ±5%, 1/4W	MIL-R-11/8	RC07GF201J
	RESISTOR, Same as R24		
	RESISTOR, 3.9K ±5%, 1/4W	MIL-R-11/8	RC07GF392J
	RESISTOR, Same as R39		
	RESISTOR, Same as R1		
	RESISTOR, Same as R2		
	RESISTOR, 9.76K ±1%, 1/8W	EMR*	625
	RESISTOR, 806Ω ±1%, 1/8W (Nominal Value)	EMR*	625
	RESISTOR, 5.49K ±1%, 1/8W (Nominal Value)	EMR*	625
	RESISTOR, Same as R13		
	RESISTOR, 6.2K ±5%, 1/4W	MIL-R-11/8	RC07GF622J
	RESISTOR, Same as R13		
	RESISTOR, 16K ±5%, 1/4W	MIL-R-11/8	RC07GF163J
	RESISTOR, 24K ±5%, 1/4W	MIL-R-11/8	RC07GF243J
	RESISTOR, Same as R52		
	RESISTOR, 8.2K ±5%, 1/4W	MIL-R-11/8	RC07GF822J
	RESISTOR, 1.0K ±5%, 1/4W	MIL-R-11/8	RC07GF102J
	RESISTOR, Same as R21		
d R59	RESISTOR, Same as R22		
	RESISTOR, Same as R24		
u R64	RESISTOR, Factory Adjustment		

late coded number in PART NO. column with approved vendors in Table 6-19.

Table 6-15. Output Printed-Circuit Card, Parts List (Ref. Figure 5-26)

RCUIT MBOL NO.	DESCRIPTION	MANUFACTURER	
		NAME	PART NO.
5	OUTPUT PRINTED-CIRCUIT CARD	EMR	6460
	CAPACITOR, 6.8 μf ±20%, 35V	EMR*	601
nd C3	CAPACITOR, 15 Pf ±.5 Pf, 500V	EMR*	600
	CAPACITOR, Same as C1		
	CAPACITOR, 39 Pf ±.5 Pf, 500V	EMR*	600
	CAPACITOR, Same as C2		
	CAPACITOR, 10 Pf ±.5 Pf, 500V	EMR*	600
	CAPACITOR, Same as C5		
	CAPACITOR, Same as C7		
thru C12	CAPACITOR, 1 μf ±20%, 35V	EMR*	601
thru C16	CAPACITOR, Same as C1		
	CAPACITOR, 22 μf ±20%, 35V	EMR*	601
	CAPACITOR, 820 Pf ±1%, 300V	EMR*	600
	CAPACITOR, Factory adjustment	EMR*	600
	CAPACITOR, 110 Pf ±1%, 500V	EMR*	600
	CAPACITOR, Same as C17		
	CAPACITOR, Same as C2		
	CAPACITOR, 470 Pf ±1%, 500V	EMR*	600
	CAPACITOR, Same as C2		
	CAPACITOR, Same as C1		
	CAPACITOR, Same as C2		
thru C29	CAPACITOR, Same as C1		
thru CR5	DIODE	EMR*	663
	DIODE	General Inst.	1N914
thru CR9	DIODE, Same as CR1		
)	DIODE, 15V ±5%, 400 Mw	Motorola	1N965B
and CR12	DIODE, Same as CR1		
3	DIODE, Same as CR6		
4	DIODE, Same as CR1		
5	DIODE, Same as CR10		
	RELAY	D. Randall	12MC1A
aru K4	RELAY	D. Randall	12MC2A
4140-M5	RELAY	D. Randall	12MM2A
only)			
	INDUCTOR, 10 μh ±10%, 200 Ma	Miller	9330-24
aru Q3	TRANSISTOR	Motorola	MPS6522/ SPS 2940
	TRANSISTOR	Motorola	MPS6521
	TRANSISTOR, Same as Q1		
aru Q8	TRANSISTOR, Same as Q4		
nd Q10	TRANSISTOR	EMR*	666
	TRANSISTOR, Same as Q1		
and Q13	TRANSISTOR	Motorola	2N3565
	TRANSISTOR, Same as Q1		
and Q16	TRANSISTOR, Same as Q12		
	TRANSISTOR, Same as Q4		
	TRANSISTOR, Same as Q12		
and Q20	TRANSISTOR, Same as Q1		
	TRANSISTOR, Same as Q4		
	TRANSISTOR, Same as Q9		
thru Q27	TRANSISTOR, Same as Q4		
and Q29	TRANSISTOR, Same as Q1		
	TRANSISTOR	Texas Inst.	2N929
and Q32	TRANSISTOR	Motorola	2N3734
	TRANSISTOR, Same as Q1		
	TRANSISTOR, Same as Q12		

relate coded number in PART NO. column with approved vendor in Table 6-19.

Table 6-15 (Cont'd.). Output Printed-Circuit Card, Parts List

RCUIT MBOL NO.	DESCRIPTION	MANUFACTURER	
		NAME	PART NO.
and Q36	TRANSISTOR	Motorola	2N3762
	TRANSISTOR	Motorola	2N3251
	RESISTOR, 22Ω ±5%, 1/4W	MIL-R-11/8	RC07GF220J
	RESISTOR, 1.33K ±1%, 1/8W	EMR*	625
	RESISTOR, 3.83K ±1%, 1/8W	EMR*	625
	RESISTOR, 220Ω ±5%, 1/4W	MIL-R-11/8	RC07GF221J
	RESISTOR, Same as R1		
	RESISTOR, 910Ω ±5%, 1/4W	MIL-R-11/8	RC07GF911J
	RESISTOR, 3.9K ±5%, 1/4W	MIL-R-11/8	RC07GF392J
	RESISTOR, Same as R4		
	RESISTOR, 56Ω ±5%, 1/4W	MIL-R-11/8	RC07GF560J
	RESISTOR, 620Ω ±5%, 1/4W	MIL-R-11/8	RC07GF621J
	RESISTOR, Factory adjustment, ±1%, 1/8W	EMR*	625
	RESISTOR, Same as R9		
	POTENTIOMETER, 1K ±10%, 1W	Amphenol	2600P-102
	RESISTOR, 4.64K ±1%, 1/8W	EMR*	625
and R16	RESISTOR, Same as R9		
	RESISTOR, 820Ω ±5%, 1/4W	MIL-R-11/8	RC07GF821J
	RESISTOR, 20K ±5%, 1/4W	MIL-R-11/8	RC07GF203J
	RESISTOR, Same as R9		
	RESISTOR, 3.92K ±1%, 1/8W	EMR*	625
	RESISTOR, 20.5K ±1%, 1/8W	EMR*	625
	RESISTOR, Same as R9		
and R24	RESISTOR, 8.2K ±5%, 1/4W	MIL-R-11/8	RC07GF822J
and R26	RESISTOR, 100Ω ±1%, 1/8W	EMR*	625
	RESISTOR, 10K ±1%, 1/8W	EMR*	625
	RESISTOR, 3.3K ±5%, 1/4W	MIL-R-11/8	RC07GF332J
	RESISTOR, 16K ±5%, 1/4W	MIL-R-11/8	RC07GF163J
	RESISTOR, Same as R7		
	RESISTOR, 2.2K ±5%, 1/4W	MIL-R-11/8	RC07GF222J
	RESISTOR, Same as R4		
	RESISTOR, 866Ω ±1%, 1/8W	EMR*	625
	RESISTOR, 16.2K ±1%, 1/8W	EMR*	625
	RESISTOR, 3.32K ±1%, 1/8W	EMR*	625
	RESISTOR, 3.01K ±1%, 1/8W	EMR*	625
	RESISTOR, Same as R13		
	RESISTOR, Same as R4		
**	RESISTOR, Same as R21		
and R41	RESISTOR, Same as R27		
	RESISTOR, Same as R1		
and R44	RESISTOR, 78.7K ±1%, 1/8W	EMR*	625
	RESISTOR, 6.19K ±1%, 1/8W	EMR*	625
	RESISTOR, 2K ±5%, 1/4W	MIL-R-11/8	RC07GF202J
	RESISTOR, Same as R23		
	RESISTOR, 3.16K ±1%, 1/8W	EMR*	625
	RESISTOR, Same as R46		
	RESISTOR, 10K ±5%, 1/4W	MIL-R-11/8	RC07GF103J
	RESISTOR, 2.49K ±1%, 1/8W	EMR*	625
	RESISTOR, Same as R23		
	RESISTOR, 4.99K ±1%, 1/8W	EMR*	625
	RESISTOR, Same as R50		
	RESISTOR, 39K ±5%, 1/4W	MIL-R-11/8	RC07GF393J
	RESISTOR, Same as R4		
	RESISTOR, Same as R46		

relate coded number in PART NO. column with approved vendor in Table 6-19.
Table 6-15A for component value for 4140-M5.

Table 6-15 (Cont'd.). Output Printed-Circuit Card, Parts List

CUIT MBOL IO.	DESCRIPTION	MANUFACTURER	
		NAME	PART NO.
nd R59	RESISTOR, Same as R9		
	RESISTOR, 12K ±5%, 1/4W	MIL-R-11/8	RC07GF123J
	RESISTOR, 220Ω ±10%, 1W	Allen Bradley	RC32GF221K
nd R63	RESISTOR, Same as R25		
	RESISTOR, Same as R55		
	POTENTIOMETER, 100Ω ±1%, 1W	Amphenol	2600P-101
	RESISTOR, 100K ±1%, 1/8W	EMR*	625
	RESISTOR, Same as R46		
	RESISTOR, Same as R51		
	RESISTOR, Same as R9		
	RESISTOR, 24.9K ±1%, 1/8W	EMR*	625
	RESISTOR, 6.8K ±5%, 1/4W	MIL-R-11/8	RC07GF682J
nd R73	RESISTOR, Same as R25		
	RESISTOR, Same as R71		
nd R76	RESISTOR, Same as R23		
	RESISTOR, Same as R9		
	RESISTOR, Same as R65		
	RESISTOR, 100Ω ±5%, 1/4W	MIL-R-11/8	RC07GF101J
	RESISTOR, 200Ω ±5%, 1/4W	MIL-R-11/8	RC07GF201J
	RESISTOR, 150Ω ±10%, 1W	MIL-R-11/8	RC32GF151K
	RESISTOR, Same as R80		
	RESISTOR, 50K ±0.25%, 1/8W	Riedon	SM-5
	RESISTOR, Same as R50		
	RESISTOR, Same as R4		
nd R87	RESISTOR, 10Ω ±.25%, 2.5W	EMR*	621
nd R89	RESISTOR, 25K ±0.25%, 1/8W	Riedon	SM-5
	RESISTOR, Same as R83		
	POTENTIOMETER, 10K ±10%, 1W	Amphenol	2600P103
	RESISTOR, 10.5K ±.25%, 1/8W	EMR*	625
	RESISTOR, Same as R29		
	RESISTOR, Same as R79		
	RESISTOR, Same as R81		
	RESISTOR, Same as R80		
hru R99	RESISTOR, Same as R86		
	RESISTOR, 8.335K ±0.25%, 1/8W	Riedon	SM-5
	RESISTOR, 16.67K ±.25%, 1/8W	Riedon	SM-5
	RESISTOR, Same as R7		
	RESISTOR, 1.6K ±5%, 1/4W	MIL-R-11/8	RC07GF162J
	RESISTOR, Same as R23		
	RESISTOR, Same as R80		
**	RESISTOR, 5.765K ±0.25%, 1/8W	Riedon	SM-5
	RESISTOR, 51.1K ±1%, 1/8W	EMR*	625
**	RESISTOR, 11.53K ±0.25%, 1/8W	Riedon	SM-5
	RESISTOR, 180Ω ±10%, 1W	MIL-R-11/6	RC32GF181K
and R111	RESISTOR, 1K ±5%, 1/4W	MIL-R-11/8	RC07GF102J
	RESISTOR, 9.09K ±1%, 1/8W	EMR*	625
	RESISTOR, 20K ±5%, 1/4W	MIL-R-11/8	RC07GF203J
	RESISTOR, Same as R91		
**	RESISTOR, (Used only on 4140-M5)		
**	RESISTOR, (Used only on 4140-M5)		
**	RESISTOR, (Used only on 4140-M5)		
**	RESISTOR, (Used only on 4140-M5)		

relate coded number in PART NO. column with approved vendor in Table 6-19.
Table 6-15A for component values for 4140-M5.

Table 6-15A. Model 4140-M5 Output Card Modification Parts List

RCUIT MBOL NO.	DESCRIPTION	MANUFACTURER	
		NAME	PART NUMBER
	RESISTOR, 15K ±0.25%, 1/8W	EMR*	625
	RESISTOR, 30K ±0.25%, 1/8W	EMR*	625
	POTENTIOMETER, 5K ±30%, 1/2W	Beckman	62PR5K
	RESISTOR, 37.4K ±1%, 1/8W	EMR*	625

elate coded number in PART NO. column with approved vendor in Table 6-19.

Table 6-16. Regulator Printed-Circuit Card, Parts List (Ref. Figure 5-28)

CUIT MBOL IO.	DESCRIPTION	MANUFACTURER	
		NAME	PART NO.
5	REGULATOR PRINTED-CIRCUIT CARD	EMR	6475
	CAPACITOR, 1 µf ±20%, 35V	EMR*	601
	CAPACITOR, 0.02 µf ±10%, 100V	EMR*	809
	CAPACITOR, 47 µf ±20%, 35V	EMR*	601
	CAPACITOR, 120 Pf ±1%, 500V	EMR*	600
	CAPACITOR, 100 µf ±20%, 20V	EMR*	601
	CAPACITOR, 1000 Pf ±1%, 100V	EMR*	600
	CAPACITOR, Same as C7		
	CAPACITOR, Same as C8		
	CAPACITOR, Same as C4		
	CAPACITOR, Same as C7		
nd C17	CAPACITOR, 1000 µf ±20%, 6V	Kemment	K1000A6S
	DIODE	EMR*	642
	DIODE	Motorola	1N4743A
	DIODE	Motorola	1N4002
	DIODE	Motorola	1N4001
	DIODE	EMR*	642
	DIODE, Same as CR1		
	DIODE, Same as CR3		
	DIODE, Same as CR5		
nd CR10	DIODE	Motorola	1N936A
	DIODE	EMR*	642
	TRANSISTOR	Motorola	MPS6522/-SPS2940
d Q3	TRANSISTOR	National Semi.	2N3054
	TRANSISTOR, Same as Q1		
	TRANSISTOR, Same as Q2		
ru Q13	TRANSISTOR	Motorola	2N3565
nd Q17	TRANSISTOR, Same as Q7		
nd Q19	TRANSISTOR, Same as Q1		
	TRANSISTOR	Motorola	2N3766
	TRANSISTOR	Motorola	2N3740
	TRANSISTOR, Same as Q7		
	TRANSISTOR, Same as Q1		
	TRANSISTOR, Same as Q7		
	TRANSISTOR, Same as Q1		
	TRANSISTOR, Same as Q7		
	TRANSISTOR, Same as Q21		
nd Q29	TRANSISTOR, Same as Q7		
nru Q33	TRANSISTOR, Same as Q1		
	RESISTOR, 2K ±5%, 1/4W	MIL-R-11/8	RC07GF202J
	RESISTOR, 8.2K ±5%, 1/4W	MIL-R-11/8	RC07GF822J
	RESISTOR, 2.05K ±1%, 1/8W	EMR*	625
d R5	RESISTOR, 12K ±5%, 1/4W	MIL-R-11/8	RC07GF123J
	RESISTOR, 2.26K ±1%, 1/8W	EMR*	625
	RESISTOR, Same as R4		
	RESISTOR, 953Ω ±1%, 1/8W	EMR*	625
	RESISTOR, 1.6K ±5%, 1/4W	MIL-R-11/8	RC07GF162J
	POTENTIOMETER, 1K ±10%, 1W	Amphenol	2600P-102
	RESISTOR, Same as R10		
	POTENTIOMETER, 500Ω ±10%, 1W	Amphenol	2600P-501
	RESISTOR, 1.3K ±5%, 1/4W	MIL-R-11/8	RC07GF132J

elate coded number in PART NO. column with approved vendor in Table 6-19.

Table 6-16 (Cont'd.). Regulator Printed-Circuit Card, Parts List

CUIT MBOL NO.	DESCRIPTION	MANUFACTURER	
		NAME	PART NO.
	RESISTOR, 2.49K ±1%, 1/8W	EMR*	625
	RESISTOR, Same as R4		
	RESISTOR, Same as R16		
	RESISTOR, 3K ±3%, 2.5W	EMR*	621
	RESISTOR, 150Ω ±5%, 1/4W	MIL-R-11/8	RC07GF151J
	RESISTOR, 2.2K ±5%, 1/4W	MIL-R-11/8	RC07GF222J
	RESISTOR, 470Ω ±5%, 1/4W	MIL-R-11/8	RC07GF471J
	RESISTOR, 3.6K ±5%, 1/4W	MIL-R-11/8	RC07GF362J
	RESISTOR, 3.9K ±5%, 1/4W	MIL-R-11/8	RC07GF392J
	RESISTOR, 1.47K ±1%, 1/8W	EMR*	625
	RESISTOR, 3K ±5%, 1/4W	MIL-R-11/8	RC07GF302J
	RESISTOR, 1K ±5%, 1/4W	MIL-R-11/8	RC07GF102J
	RESISTOR, 1.54K ±1%, 1/8W	EMR*	625
	RESISTOR, Same as R27		
	RESISTOR, Same as R31		
	RESISTOR, 7.5K ±5%, 1/4W	MIL-R-11/8	RC07GF752J
	RESISTOR, Same as R25		
	RESISTOR, 6.8K ±5%, 1/4W	MIL-R-11/8	RC07GF682J
	RESISTOR, 40Ω ±3%, 2.5W	EMR*	621
nd R42	RESISTOR, 15K ±5%, 1/4W	MIL-R-11/8	RC07GF153J
	RESISTOR, 6.2K ±5%, 1/4W	MIL-R-11/8	RC07GF622J
	RESISTOR, 1.5K ±5%, 1/4W	MIL-R-11/8	RC07GF152J
	RESISTOR, Same as R29		
	RESISTOR, Same as R1		
	RESISTOR, Same as R2		
	RESISTOR, Same as R28		
nd R50	RESISTOR, Same as R4		
	RESISTOR, 1.87K ±1%, 1/8W	EMR*	625
	RESISTOR, Same as R14		
	RESISTOR, Same as R16		
	RESISTOR, Same as R2		
	RESISTOR, Same as R39		
	RESISTOR, 75Ω ±3%, 2.5W	EMR*	621
	RESISTOR, Same as R34		
	RESISTOR, 16K ±5%, 1/4W	MIL-R-11/8	RC07GF163J
	RESISTOR, 4.3K ±5%, 1/4W	MIL-R-11/8	RC07GF432J
	RESISTOR, 20K ±5%, 1/4W	MIL-R-11/8	RC07GF203J
	RESISTOR, 10K ±5%, 1/4W	MIL-R-11/8	RC07GF103J
	RESISTOR, Same as R39		
	RESISTOR, Same as R4		
	RESISTOR, Same as R21		
	RESISTOR, Same as R22		
	RESISTOR, Same as R1		
	RESISTOR, Same as R24		
	RESISTOR, Same as R25		
	RESISTOR, Same as R27		
	RESISTOR, Same as R51		

elate coded number in PART NO. column with approved vendor in Table 6-19.

Table 6-17. Rear-Panel Assembly, Parts List (Ref. Figure 3-1)

CUIT MBOL O.	DESCRIPTION	MANUFACTURER	
		NAME	PART NO.
	REAR PANEL ASSEMBLY	EMR	6245
	FUSE, 5 Amp., 3 AG	Littlefuse	312005
ru J4	CONNECTOR, Type BNC	Automatic Metal Products	UG1094A/U
	CONNECTOR, 52 Pin	Amphenol	220-1N-052
	CONNECTOR	Hubbell	7486
	BINDING POST	Superior	GP30NC
	BINDING POST	Superior	DF30BC
	SWITCH, Toggle	Torbal	SP-7
	FUSE HOLDER	Littlefuse	342004
	BLOWER, Muffin Venturi Version	Rotron	
	CONNECTOR, Type BNC (Mates with J1 through J4)	Automatic Metal Products	UG-260/U
	CONNECTOR (Mates with J5)	Amphenol	220-2N052
	CONNECTOR (Mates with J6)	Hubbell	7484

able 6-18. Power Supply Assembly, Parts List (Ref. Figure 5-30)

CUIT BOL O.	DESCRIPTION	MANUFACTURER	
		NAME	PART NO.
	POWER SUPPLY ASSEMBLY	EMR	6246
hru CR3	DIODE (Bridge)	Motorola	MDA952-2
	CAPACITOR, 2600 μf ±10%, 50V	Sprague	36D262G0 50AB2A
	CAPACITOR, 5500 μf ±10%, 25V	Sprague	36D552G0 25AB2A
	CAPACITOR, Same as C1		
	TRANSISTOR	Motorola	2N3791
ru Q4	TRANSISTOR	Motorola	2N3055
ru R3	RESISTOR, 3.3K ±10%, 1W	MIL-R-11	RC32GF332K
	TRANSFORMER	EMR	7635
	COMPONENT MOUNTING BOARD (Ref. Figure 5-31)	EMR	6837
R1	DIODE	Motorola	1N2982A
R2 and	DIODE	Motorola	1N4736A
R4	DIODE, Same as TB1CR1		
1	TRANSISTOR	Motorola	2N3766
2	TRANSISTOR	Motorola	2N3740
1 and R2	RESISTOR, 2Ω ±3%, 10W	EMR*	622
3	RESISTOR, 120Ω ±10%, 2W	MIL-R-11	RC42GF121K
4	RESISTOR, 1.5K ±10%, 2W	MIL-R-11	RC42GF152K
5 and R6	RESISTOR, 33Ω ±3%, 3W	EMR*	621
7	RESISTOR, 1.8K ±10%, 2W	MIL-R-11	RC42GF182K

elate coded number in PART NO. column with approved vendor in Table 6-19.

Table 6-19. Approved Vendors List

OURCE TROL BER	VENDOR	TYPE
0	Electro-Motive Mfg. Co.	DM Series
	Arco Electronics	DM Series
1	Kemet Company	J Series
	Sprague Electric Co.	CS13, 150D
	Mallory Capacitor Co.	TAS Series
	U.S. Semcor	TS-1 TS4
9	Alpha Wire Corp	
	Columbia Wire & Supply Co.	
1	Dale Electronics	RS-2C
	Sage Electronics	SA2W
	Ward-Leonard	3SX
	Mepco, Inc.	HT120
3	Dale Electronics	RS-5
	Ohmite	RW67
	Sage Electronics	1550S
4	IRC	EM
	Mepco	FE-10
	Dale	MF-1/10
	Sprague	416E
5	IRC	MEA
	Mepco	FE-12
	Dale Electronics	MF
	Ward-Leonard	WL60
	Electra	MF5
	Sprague	418E
9	Clevite Semiconductor	1N457
	Erie Tech. Prod.	1N457
	Fairchild Semiconductor	1N457
	Hughes Semiconductor	1N457
	Continental Device Corp.	1N457
	Raytheon	1N457
	Sylvania	1N457
	Transitron	1N457
	General Instrument	1N457
2	General Instrument	1N746A through 1N759A
	Hoffman	1N746A through 1N759A
	Motorola	1N746A through 1N759A
	Continental Device	1N746A through 1N759A
	Texas Instrument	1N746A through 1N759A
	Transitron	1N746A through 1N759A
	TRW	1N746A through 1N759A

Table 6-19 (Cont'd.). Approved Vendors List

URCE ROL ER	VENDOR	TYPE
	Western	1N746A through 1N759A
.)	International Rectifier	1N746A through 1N759A
	Hughes	1N746A through 1N759A
	General Instrument	2N1309
	Texas Instrument	2N1309
	RCA	2N1309
	General Instrument	2N404
	Texas Instrument	2N404
	RCA	2N404
	Texas Instrument	2N2412
	Transitron	SG-22
	Continental Device	CD1117
	Sylvania	DG472
	General Electric	NPN
	General Instrument	NPN
	National Semiconductor	NPN
	Fairchild	NPN
	Motorola	NPN
	General Electric	2N708
	General Instrument	2N708
	Texas Instrument	2N708
	RCA	2N708
	Motorola	2N708
	National Semiconductor	2N708
	Continental Device	1N3064
	General Electric	1N3064
	Raytheon	1N3064
	Sylvania	1N3064
	Texas Instrument	1N3064
	Transitron	1N3064
	Hughes	2N1131
	Motorola	2N1131
	Fairchild	2N1131
	Transitron	2N1131
	Texas Instrument	2N1131
	Admiral Plastics	
	Delbert Blinn	
	Milton Ross	
	Thermalloy	
	Perfection Mica	
1	Milton Ross	
	Thermalloy	

Table 6-19 (Cont'd.). Approved Vendors List

)URCE ROL 3ER	VENDOR	TYPE
	Motorola	2N2501
	General Instrument	2N2501
	Electro-Motive Mfg. Co.	MPD Series
	Fairchild	
	Western Semiconductors	
	Texas Instrument	2N1308
	RCA	2N1308
	Daystrom	
	Fairchild	FA2411
	Electro Cube, Inc.	
	Continental Device	1N965
	Fairchild	1N965
	Motorola	SZ50548
	Ledex, Inc.	
	Ledex, Inc.	

APPENDIX A

CARD TEST PROCEDURES

appendix contains test procedures for each card in the Model 4140. The
se of these test procedures is to allow individual card checkout and to
mine the values of components that are test variable.

ame and assembly number of the card is shown in the lower left corner
ch procedure.

MANUFACTURING TEST PROCEDURE

For

4140-05-M5
LOW PASS OUTPUT FILTER POLE PAIR

Prepared by _____ Date 5/8/68
C. Holderman

Approved by _____ Date 6/6/68
E. West

TEST EQUIPMENT

The following test equipment or equivalent is required to test the Low Pass Output Filter, Pole Pair:

1.1 HP-400L (2)

1.2 HP-651A or General Radio 1310-A

1.3 CMC Model 706C

1.4 RCA WV-98A

1.5 Capacitance Meter T-0448

1.6 Power Designs 4005

1.7 4140 Chassis

1.8 7525/7526/7527 Adapter Card

1.9 Precise Decade Resistance 468

PRELIMINARY

2.1 In the event of difficulty in performing the electrial test in Section 3, a troubleshooting guide is given in TABLE I. This guide is for the purpose of checking the operation of the relays on the card plus give an approximate indication of the values of the switchable components. The accuracy of the component variables are solely a function of the measuring instruments. The capacitance meter accuracy is ±5% full scale and the ohmmeter accuracy is 3 degress of arc any place on the scale.

2.2 Connect the card being tested with an extender card and the LPOF 2P adapter card into its proper location in the discriminator. The regulator card should also be installed in the discriminator. The MSD switch on the adapter card should be OFF unless otherwise indicated on TABLE I.

2.3 Connect the ohmmeter and/or capacitance meter to the positions indicated in the LOCATION column of TABLE I. The leads on the capacitance meter should always be connected to obtain the minimum capacitance reading.

2.4 Place the discriminator switches in the positions indicated in the DEV and FREQ. columns and observe the proper values of the component being measured.

2.5 A separate test record has been prepared for each pole pair assembly. Insure that the assembly number on the test record is the same as the assembly number on the printed circuit card.

ELECTRICAL TESTS

3.1 Connect an extender card with the 7525/7526/7527 adapter card into its proper position in the discriminator. Connect the LPOF pole pair into the adapter card.

3.1.1 The following correlates the assembly number and the socket in the discriminator:

Assembly No.	Socket
7525,-1,-2	J12
7526,-1	J13
7527	J14

3.1.2 Necessary variables must be tacked in temporarily.

3.2 Place the VTVM switch on the adapter card in the OUTPUT position. Place the MSD switch ON. Connect the test equipment as shown in Figure 1.

3.3 Set the input oscillator to 1 kHz as indicated by the dial reading of the oscillator. Set the low pass switches on the discriminator to 100 kHz.

3.4 Adjust the amplitude of the oscillator to obtain 0 db on the 3V scale of the output VTVM. Note the voltage indicated on the input VTVM. This voltage level should be within 0.1 db of the output voltage. Check on the test record.

3.4.1 A switch position was included on the VTVM switch to facilitate checking the tracking of the two VTVM's. The purpose of using two VTVM's is to reduce the number of switch movements with each measurement.

3.5 Sweep the input frequency, maintaining constant amplitude, to determine the frequency at which the indicated attenuation occurs. If the frequency is within the allowable limits check the appropriate box in TABLE 2.

3.5.1 Repeat step 3.5 for each of the conditions listed in TABLE 2.

3.6 Sweep the input frequency, maintaining constant amplitude, to determine the peak frequency and the peak gain. If the frequency and gain are within the allowable limits in TABLE 3, check the appropriate box.

3.7 Continue to sweep the input frequency, maintaining constant amplitude, to determine the frequency at which 3 db attenuation occurs. If the frequency is within the allowable limits given in TABLE 4, check the appropriate box.

3.8 Repeat steps 3.6 and 3.7 for each of the conditions in TABLES 3 and 4.

3.8.1 On low frequency switch positions the frequency limits are expressed in time limits. Therefore, when time limits are given, the frequency counter should be set to measure period.

3.9 List values of all the variables installed permanently in the unit in the appropriate place on the test record.

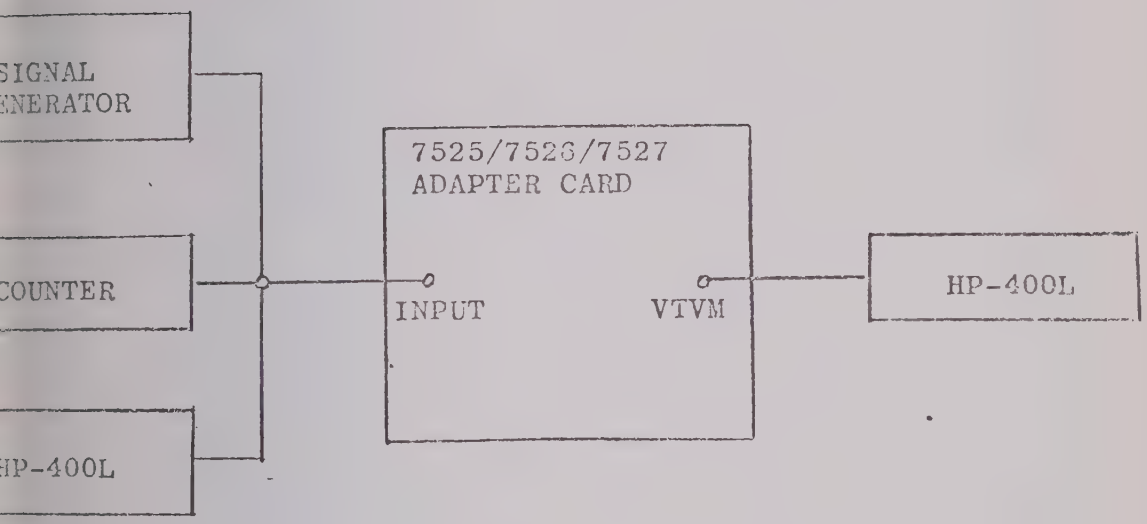
SIGNAL
ENERATOR
COUNTER
HP-400L
7525/7526/7527
ADAPTER CARD
INPUT
VTVM
HP-400L

FIGURE I

ADAPTER CARD

sis
ctor

Card
Connector

Test
Points

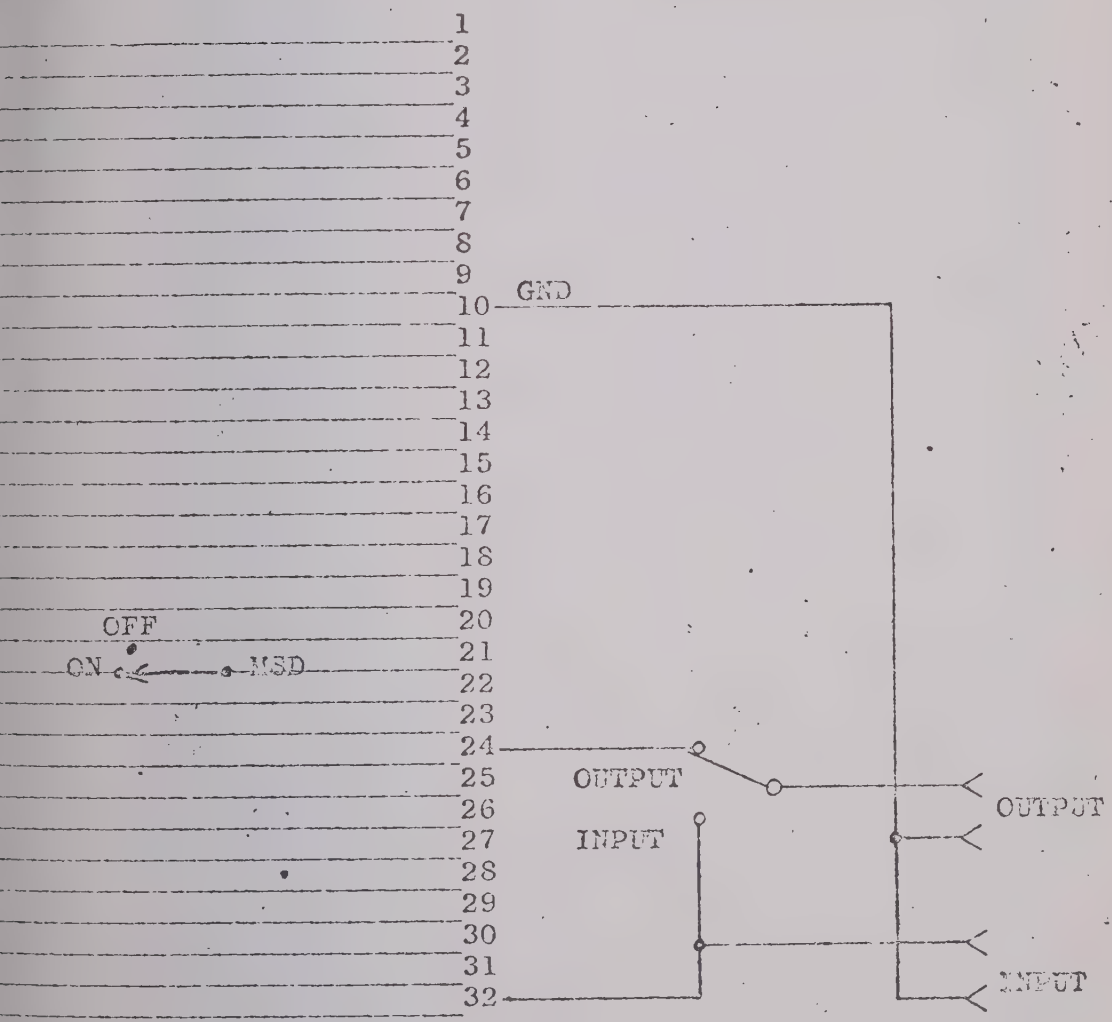

- 7525
- 7526
- 7527

L.P.O.F. POLE PAIR

Assembly No. 7525, 7526, 7527

SWITCHES			MEASUREMENT			
CA-CD	MSD	FREQ.	R	R SYMBOL	C	C SYMBOL
CA						
	OFF	101. Hz	1M	R11	---	---
		102. Hz	500K	R33	---	---
		104. Hz	250K	R17	---	---
		108. Hz	124K	R9	---	---
		110. Hz	100K	R15	---	---
		120. Hz	50K	R31	---	---
		140. Hz	25K	R35	---	---
		180. Hz	12.4K	R19	---	---
	ON	100. Hz	10K	R5	---	---
	OFF	200. Hz	5K	R13	---	---
		400. Hz	2.5K	R29	---	---
		800. Hz	1.24K	R7	---	---
CA						
		101. Hz	1M	R12	---	---
		102. Hz	500K	R34	---	---
		104. Hz	250K	R18	---	---
		108. Hz	124K	R10	---	---
		110. Hz	100K	R16	---	---
		120. Hz	50K	R32	---	---
		140. Hz	25K	R36	---	---
		180. Hz	12.4K	R20	---	---
	ON	100. Hz	10K	R6	---	---
	OFF	200. Hz	5K	R14	---	---
		400. Hz	2.5K	R30	---	---

TABLE I

L.P.C.F. POLE PAIR

ASSEMBLY NO. 7535

SWITCHES			MEASUREMENT			
CA-CB MSB		FREQ.	R	R SYMBOL	C	C SYMBOL
CB		100. kHz			OPEN	C35, C36
CA	OFF	100. kHz	---	---	OPEN	
		10.0 kHz	---	---	930 pf	C13
					890 pf	
					950 pf	
		1.00kHz	---	---	.01	C8
		100 Hz	---	---	.10	C25
		10.0 Hz	---	---	1.05	C29
		1.00 Hz			11.0	C33
CB	OFF	10.0 Hz	9.3K	R45	---	---
			10.2		---	---
			12.1		---	---
CA	OFF	10.0 Hz	15.0K	R47	---	---
			18.2K		---	---
			17.8K		---	---
CB		100. kHz			OPEN	C37, C38
CA	OFF	100. kHz	---	---	OPEN	
			---	---		
			---	---		
		10.0 kHz	---	---	3500 pf	C16
			---	---	2950 pf	
			---	---	2700 pf	
		1.00 kHz	---	---	.039	C10
			---	---	.033	
			---	---	.030	
		100. Hz	---	---	.355	C23
			---	---	.33	
			---	---	.30	

ASSEMBLY NO. 7655 (cont'd)

SWITCHES			MEASUREMENT			
CA-CB MS?		FREQ.	R	R SYMBOL	C	C SYMBOL
CA	OFF	10.0 Hz	---	---	3.9	C27
			---	---	3.3	
			---	---	3.0	
		1.00 Hz	---	---	41	C31
			---	---	34	
			---	---	34	
CA		10.0 Hz	523	R48	---	---
			232		---	---
			2.15K		---	---
CB		10.0 Hz	3.16K	R46		
			3.57K		---	---
			909		---	---

L.P.C.F. POLE PAIR AP-10410
REV. ___

ASSEMBLY NO. 7628

SWITCHES		MEASUREMENT			
CA-CD	FREQ.	R	R SYMBOL	C	C SYMBOL
CD	00 kHz	---	---	OPEN	C37, C38
CA	100 kHz	---	---	OPEN	C39, C40
		---	---		
	10 kHz	---	---	2700 pf	C16
		---	---	2880 pf	
	1 kHz	---	---	.03	C10
		---	---	.033	
	100 Hz	---	---	.30	C23
		---	---	.33	
	10 Hz	---	---	3.0	C27
		---	---	3.3	
	1 Hz	---	---	30	C31, C43
		---	---	34	
CD	10.0 Hz	9.76K	R45	---	---
		10.2 K		---	---
CA		23.2 K	R47	---	---
		68.1 K		---	---
CA	10.0 Hz	422	R48	---	---
		4.22K		---	---
CD		3.57K	R46	---	---
		866		---	---

L.P.O.F. POLE PAIR AP-10410
Rev. _____

ASSEMBLY NO. 7525

SWITCHES			MEASUREMENT			
CA-CD	MSD	FREQ.	R	R SYMBOL	C	C SYMBOL
CD		100 kHz	----	----	OPEN	C35, C36
CA	OFF	100 kHz	----	----	OPEN	C41, C42
		10 kHz	----	----	950 pf	C13
		1 kHz	----	----	.01	C8
		100 Hz	----	----	.10	C25
		10 Hz	----	----	1.05	C29
		1 Hz	----	----	11.0	C33

TABLE I

L.P.C.C. PCB PATA

AP-10410
REV. ____

ASSEMBLY NO. 7527

SWITCHES			MEASUREMENT			
ON	CA-CD	MSD	FREQ.	R	R SYMBOL	C	C SYMBOL
	CD		100.kHz			OPEN	C35,C36
	CA	OFF	100 kHz	---	---	OPEN	C41,C42
			10.0 kHz	---	---	990 pf	C13
			00 kHz	---	---	011	C8
			100 Hz	---	---	0.11	C25
			10.0 Hz	---	---	1.10	C29
			1.00 Hz	---	---	11.0	C33
5	CD		100 kHz	---	---	OPEN	C37,C38
	CA		100. kHz	---	---	OPEN	C39.C40
			10.0 kHz	---	---	2970 pf	C16
			1.00 kHz	---	---	.033	C10
			100. Hz	---	---	0.33	C23
			10.0 Hz	---	---	3.30	C27
			1.00 Hz	---	---	34.0	C31
	CD		10.0 Hz	9.76	R45	---	---
	CA		10.0 Hz	∞	---	---	---
C13	CA		10.0 Hz	5.49K	R48	---	---
	CD		10.0 Hz	806	R46	---	---

Date 5-8-68

ELECTRO-MECHANICAL RESEARCH, INC.

Sarasota, Florida

LPOF 2P
- Model 4140-05-M5
Assembly No. 7525

No. 7525 S/N _____

PROJECT _____

ure AP-10410 Rev. _____

POA _____

Date _____

_____ Tested by _____ Reviewed by _____

e paragraph numbers in the test record correspond to the
ragraph numbers in the test procedure.

all equipments have calibration stickers and are within their

periods _____.

Record values of all test variables used on card or mark N.A. if none used.

					(not used on 1P)
C4	_____	C36	_____	R61	_____
C9	_____	C37	_____	R62	_____
C14	_____	C38	_____	R63	_____
C17	_____	R46	_____	R64	_____
C20	_____	R48	_____		
C21	_____				
C35	_____				

C C Holden

Eugene Woolf

DIAL SETTING	CA CD	W = 1 GAIN	✓	W = 1 FREQUENCY LIMITS	✓	PEAK GAIN LIMITS	✓	PEAK FREQUENCY LIMITS	✓	3 db FREQUENCY LIMITS
100 Hz	CA	-3.97 db		10.7 - 9.3 MS		NA		NA		10.50-11.80 MS
	CD	-0.71 db		10.7 - 9.3 MS						5.635-6.350 MS
100kHz	CA	-3.97 db		91 KHz-109 KHz						81KHz-90KHz
	CD	-0.71 db		91 KHz - 109 KHz						1[illegible]Hz-178KHz
10kHz	CA	-3.97 db		9.7 KHz - 10.6KHz						[illegible]-9.9KHz
	CD	-0.71 db		9.7KHz - 10.3KHz						15.5[illegible]-18.0KHz
1kHz	CA	-3.97 db		890Hz - 1110Hz						800Hz-910Hz
	CD	-0.71 db		890Hz - 1110Hz						1.5[illegible]Hz-1.8[illegible]Hz
90.9 Hz	CA	-3.97 db		11.7MS - 9.7MS						10.60MS-12.[illegible]MS
	CD	-0.71 db		11.7MS - 9.7MS						5.640MS-6.[illegible]0MS
200 Hz	CA	-3.97 db		5.1MS - 4.9MS						5.30MS-5.9[illegible]MS
400 Hz				2.6MS - 2.4MS						2.65MS-2.99MS
870 Hz				1.3MS - 1.2MS						1.325MS-1.495MS
1.1kHz				11.[illegible]Hz - 11.3KHz						9.40KHz-10.[illegible]Hz
12.2kHz				12.0KHz - 12.5KHz						10.4KHz-11.[illegible]z
14.4kHz				14.1KHz - 14.7KHz						12.[illegible]Hz-13.[illegible]Hz
18.9kHz				18.4KHz - 19.[illegible]Hz						16.[illegible]Hz-17.[illegible]Hz
105kHz				105.5 - 114.[illegible]KHz						93KHz-[illegible]1 Hz
120kHz				115 - 126KHz						101.5KHz-112KHz
134kHz				134 - 146KHz						118KHz-129.[illegible]Hz
160kHz		-3.97 db		152 - 168KHz						15[illegible]z-16[illegible]Hz
[illegible]	CA	-6.0db		75.0 - 87.0 MS		NA		NA		NA
										CA NOMINAL=.86 x
										CD NOMINAL=1.7 x

Date 5-8-68

ELECTRO-MECHANICAL RESEARCH, INC.

Sarasota, Florida

LPOF 2P
ord - Model 4140-05-M5
Assembly No. 7526

No. 7526 S/N _____

PROJECT _____

cedure AP-10410 Rev. _____

POA _____

Date _____

_____ Tested by _____ Reviewed by _____

The paragraph numbers in the test record correspond to the paragraph numbers in the test procedure.

at all equipments have calibration stickers and are within

libration periods _____.

.0 Record values of all test variables used on card or mark N.A. if none used.

					(not used on 1P)
C4	_____	C36	_____	R61	_____
C9	_____	C37	_____	R62	_____
C14	_____	C38	_____	R63	_____
C17	_____	C39	_____	R64	_____
C20	_____	C40	_____		
C21	_____	C41	_____		
C35	_____	C42	_____		
		R46	_____		
		R48	_____		

by C Hoffman

by Eugene Wade

SETTING	CD	GAIN	✓	FREQUENCY LIMITS	✓	PEAK GAIN LIMITS	✓	PEAK FREQUENCY LIMITS	✓	3dB FREQUENCY LIMITS
10K Hz	CA	-0.88 db		9.9 - 10.2 MS		NA		NA		7.566-7.934 MS
	CD	+1.14 db		9.54 - 10.1 MS		+1.6 - +2.0 db		5.88 - 6.67 MS		3.493-3.856 MS
100kHz	CA	-0.88 db		98 - 102 KHz		NA		NA		122.5-135.5 KHz
	CD	+1.14 db		98 - 102 KHz		+1.0 - +2.0 db		112 - 170 KHz		220.0-286 KHz
10kHz	CA	-0.88 db		9.74 - 10.2 KHz		NA		NA		12.25-13.55 KHz
	CD	+1.14 db		9.56 - 10.22 KHz		+1.6 - +2.0 db		14.0 - 17.0 KHz		25.0-28.6 KHz
1kHz	CA	-0.88 db		990 - 1010 Hz		NA		NA		1.23-1.36 KHz
	CD	+1.14 db		974 - 1022 Hz		+1.6 - +2.0 db		1.48 - 1.70 KHz		2.00-2.86 KHz
99.9 Hz	CA	-0.88 db		9.4 - 10.34 MS		NA		NA		7.572-7.940 MS
	CD	+1.14 db		8.96 - 10.1 MS		+1.6 - +2.0 db		5.70 - 6.73 MS		3.489-3.861 MS
200 Hz				4.650 - 5.140 MS				2.94 - 3.43 MS		1.744-1.926 MS
400 Hz				2.300 - 2.560 MS				1.480 - 1.68 MS		1.037-1.146 KHz
800 Hz				1.060 - 1.264 MS				1.20 - 1.35 KHz		2.074-2.293 KHz
11.1kHz				10.55 - 11.70 KHz				15.0 - 19.0 KHz		28.58-31.75 KHz
12.2kHz				12.70 - 12.60 KHz				17.8 - 20.6 KHz		31.6-34.9 KHz
13.4kHz				13.70 - 14.80 KHz				20.4 - 24.8 KHz		36.6-41.2 KHz
18.6kHz				17.78 - 19.20 KHz		+1.6 - +2.0 db		26.2 - 31.6 KHz		48.0-53.8 KHz
110kHz				103.0 - 120.6 KHz		+1.2 - +2.4 db		129 - 186 KHz		248.0-314.6 KHz
130kHz				110.5 - 131.8 KHz		+1.2 - +2.5 db		144 - 210 KHz		270.8-343.2 KHz
160kHz				124.5 - 144.8 KHz		+1.2 - +2.6 db		168 - 240 KHz		312.0-400.4 KHz
180kHz	CD	+1.14 db		153.0 - 184 KHz		+1.2 - +3.0 db		228 - 320 KHz		394.0-514.8 KHz
9.99 Hz	CA	-6.0db		58 - 62 - 65 MS		NA		NA		NA
						OPTIMUM =		OPTIMUM =		OPTIMUM =
*The CD should be +1.14 db or peak gain, whichever is less						1.99 db		1.6 x W1		1.29 x W1 for CA 2.73 x W1 for CD

FINAL TEST PROCEDURE

For

MODEL 4140-05-M5

OUTPUT CARD

(6460 M5)

ared by C. Holderman Date 5/23/68

oved by E. West Date 6/10/68

TEST EQUIPMENT

The following test equipment or equivalent is required to test the Output Card Assembly.

1.1 HP-651

1.2 RCA WV-98A

1.3 Capacitance Meter T-0448

1.4 4140 Chassis

1.5 6460 Adapter Card

1.6 Precise Decade Resistance 468

1.7 HP-400L

PRELIMINARY

2.1 In the event of difficulty in performing the electrical test in section 3, a troubleshooting guide is given in TABLE I. This guide is for the purpose of checking the operation of the relays on the card plus give an approximate indication of the values of the switchable components. The accuracy of the component variables are solely a function of the measuring instruments. The capacitance meter accuracy is $\pm 5\%$ full scale and the ohmmeter accuracy is 3 degrees of arc any place on the scale.

2.2 Connect the card being tested with an extender card into its proper location in the discriminator. The regulator card should also be installed in the discriminator.

2.3 Connect the ohmmeter and/or capacitance meter to the positions indicated in the LOCATION column of TABLE I.

2.4 Place the discriminator switches in the positions indicated in the DEV and FREQ. columns and observe the proper value of the component being measured.

ELECTRICAL ADJUSTMENTS

3.1 Connect the extender card and the 6460 adapter card in J15 of the discriminator chassis. Connect the OUTPUT CARD into the adapter card.

2 Place the switches on the adapter card in the following positions:

Zero Signal	--	On
Var. Gain	--	Gnd
Amp.	--	Gnd
Dev.	--	7.5%

3 Connect the Fluke meter between E4 and ground (pin 20). Adjust R65 to cause the voltage at E4 to be as close as possible to OV. Check on the test record.

4 Connect the Fluke meter between E5 and ground (pin 20). Adjust R114 to cause the voltage at E5 to be as close as possible to OV. Check on the test record.

5 Connect the Fluke meter between TP-2 and ground. Adjust R37 to cause the voltage at TP-2 to be as close as possible to OV. Check on the test record.

6 Connect the Fluke meter between the Data Out terminal on the adapter card and ground. Be sure the jumper wire between R115 (OFFSET OPERATION adjustment) and R103 is open. Adjust R78 to cause the voltage at Data Out to be as close as possible to OV. Check on the test record.

3.6.1 Complete the circuit between R115 and R103 by tack soldering. Adjust R115 to cause the voltage at Data Out to be as close as possible to +5.0V. Check on the test record.

7 Place the DEVIATION switch on the discriminator in 7.5% position. Place the switches on the adapter card in the following positions:

Amp.	--	On
Var. Gain	--	Gnd
Zero Signal	-	Off

8 Connect the test equipment as shown in Figure 1. Connect the HP-400L between E4 and ground.

.9 Adjust the signal generator for 20 Hz as indicated by the dial reading. Adjust the amplitude of the signal generator to obtain 3V rms at E4.

3.9.1 Temporarily connect the HP-400L to the Input terminals on the adapter card. Observe the input voltage; it should be between 585MV rms and 615MV rms. Check on the test record.

.10 Temporarily connect the HP-400L to E5 and adjust R13 to obtain 3V rms. Check on the test record.

.11 Place the DEVIATION switch in the 15% position and adjust the signal generator for 3V rms at E5. Measure the voltage at E4; it should be between 2.95V rms and 3.05V rms. Check on the test record.

3.11.1 Temporarily connect the HP-400L to the Input terminals and observe the voltage; it should be between 1.17V rms and 1.23V rms. Check on the test record.

.12 Place the DEVIATION switch in the 30% position and adjust the signal generator for 3V rms at E5. Measure the voltage at E4; it should be between 2.95V rms and 3.05V rms. Check on the test record.

3.12.1 Temporarily connect the HP-400L to the Input terminals and observe the voltage; it should be between 2.34V rms and 2.46V rms. Check on the test record.

.13 Place the DEVIATION switch in the 40% position* and adjust the signal generator for 3V rms at E5. Measure the voltage at E4; it should be between 2.95V rms and 3.05V rms. Check on the test record.

3.13.1 Temporarily connect the HP-400L to the Input terminals and observe the voltage; it should be between 1.57V rms and 1.63V rms. Check on the test record.

Actually 20% for M5.

.14 Place the DEVIATION switch in the 7.5% position, connect a jumper from pin 2 to GND and adjust the signal generator for 3V rms at E5. Measure the voltage at E4; it should be between 2.95V rms and 3.05V rms. Check on the test record.

3.14.1 Temporarily connect the HP-400L to the Input terminals and observe the voltage; it should be between 3.14V rms and 3.26V rms. Check on the test record.

Remove the jumper from pin 2 to GND.

.15 Place the DEVIATION switch on the discriminator to the 7.5% position. On the adapter card, place the Amp switch in the Gnd position and the VAR. GAIN switch to ON. Connect the Fluke meter to E4 and ground. Adjust R91 to obtain -4V ±5MV DC on the Fluke meter. Check on the test record.

3.15.1 Connect the decade resistance box for R11. Connect the Fluke meter to TP-2 and select R11 to produce -5.53V ± 10MV DC.

3.15.2 Have the jumper between R115 and R103 permanently installed. Have the resistor for R11 permanently installed and recheck the voltage at TP-2 with -4V ± 5MV DC at E4. Record the resistor value installed.

3.15.3 With -2.0 Volts ± 5MV DC at E4, Ground Pin 26 of the 6460 card. The Band Edge Meter should read Lower Band Edge ± 10%. Ground Pin 27 of the 6460 card and the Band Edge Meter should read Upper Band Edge ± 10%. Check on the test record.

3.15.4 Adjust R91 so that the voltage at E4 is -9.14V DC ± 10MV. Check on the test record.

16 Place the switches on the adapter card as in 3.7 on Page 2. Place the Deviation switch on the discriminator in 30% position. Connect HP-651 to the input jacks on adapter card and the HP-400L to the DATA OUT test point. At ≈ 50 Hz, apply enough input signal to obtain 0 db on the 3V scale of the HP-400L. Move the HP-400L lead to the input and note the input signal level (≈ 0.7V).

3.16.1 Sweep upwards in frequency to 300 kHz keeping the input constant. The output should stay at 0 db ± .3 db. Check on the test record.

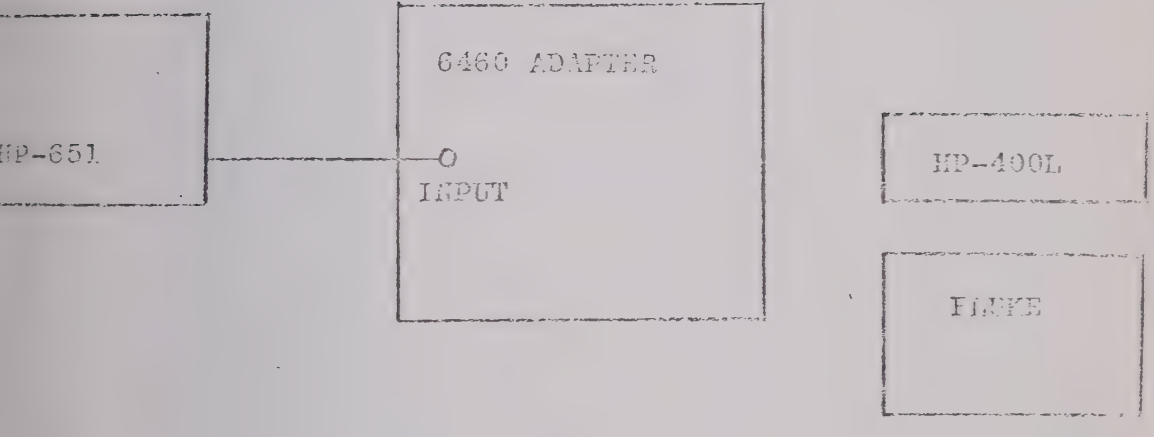

FIGURE 1

OUTPUT

6460 ADAPTER CARD

sis
ctor

Card Connector

Test Points

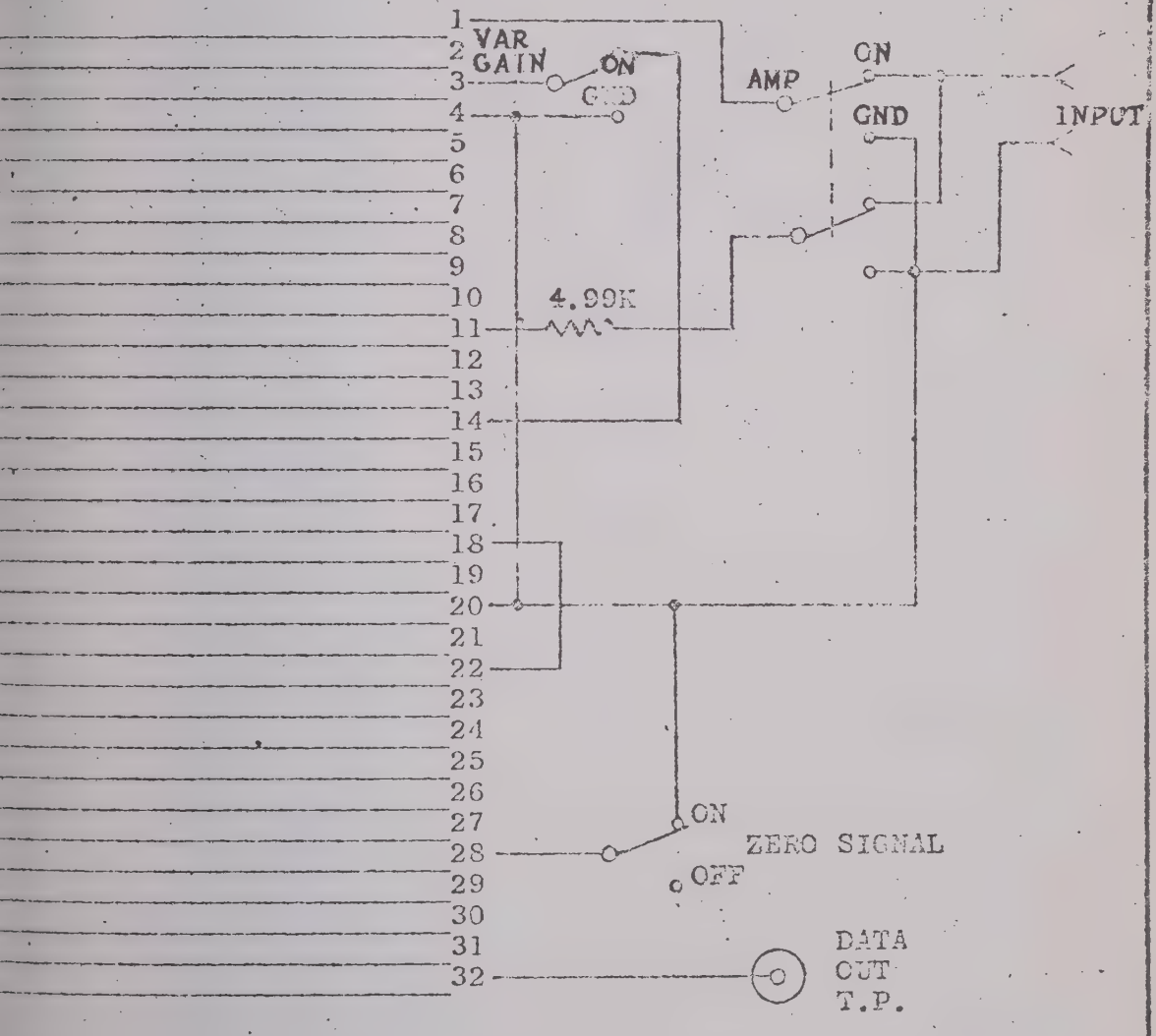

OUTPUT CARD
TABLE I

AP-10411
Rev.

ASSEMBLY 6460 M5

SWITCHES		MASTER NO.			
DEV	FREQ.	R	R SYMBOL	C	C SYMBOL
7.5		25K	R88		C24
15		12.5K	R89		
30		6.2K	R100		
40 (20)		9.4K	R106		
7.5		50K	R83		C23
15		25K	R90		
30		12.6K	R101		
40(20)		18.8K	R108		
	Dev. in ( ) are the M5 dev.				
		5.765K	R117		
		11.53K	R118		
		7.50K	R39		
		34.7K	R116		
		0-5K	R115		

Date 5-24-68

ELECTRO-MECHANICAL RESEARCH, INC.

Sarasota, Florida

OUTPUT

ord - Model 4140-05-M5
Assembly No. 6460 M5 MODEL _____

cedure AP-10411 PROJECT _____

ev. _____ POA _____

ate _____ SERIAL NO. _____

_____ Tested by _____ Reviewed by _____

The paragraph numbers in the test record correspond to the paragraph numbers in the test procedure.

at all equipments have calibration stickers and are within their calibration

_____.

.0 ELECTRICAL ADJUSTMENTS

3.3 R-65 zeroed _____ (check)

3.4 R-114 zeroed _____ (check)

3.5 R-37 zeroed _____ (check)

3.6 R-78 zeroed _____ (check)

3.6.1 R-115 set for +5V _____ (check)

3.9.1 7.5% Gain (585MV rms - 615MV rms) _____ (check)

3.10 AC Gain _____ (check)

3.11 15% Tracking (2.95V rms - 3.05V rms) _____ (check)

3.11.1 15% Gain (1.17V rms - 1.23V rms) _____ (check)

3.12 30% Tracking (2.95V rms - 3.05V rms) _____ (check)

3.12.1 30% Gain (2.34V rms - 2.46V rms) _____ (check)

3.13 40% * Tracking (2.95V rms - 3.05V rms) _____ (check)

* Actually 20% for M5

3.13.1 40% * Gain (1.57V rms - 1.63V rms) _____ (check)

3.14 40% (M5) Tracking (2.95V rms-3.05V rms) _____ (check)

3.14.1 40% (M5) Gain (3.14V rms - 3.26V rms) _____ (Check)

3.15 R-91 adjusted (-4V ± 5MV DC) _____ (check)

3.15.2 R-11 _____ K ohms

3.15.3 Pin 26 Grounded (Lower Band Edge ±10%) _____ (check)

Pin 27 Grounded (Upper Band Edge ±10%) _____ (check)

3.15.4 R-91 adjusted (-9.14V ± 10MV DC) _____ (check)

3.16.1 Frequency Response (±0.3 db 50 Hz to 300 kHz)

* Actually 20% for M5 _____ (check)

by C C Hillerman

by Eugene West

FINAL TEST PROCEDURE

For

MODEL 4140-05-M5

REGULATOR

(6475)

red by C. Holderman Date 5-7-68

C. Holderman

ved by Eugene West Date 6/6/68

E. West

TEST EQUIPMENT

The following test equipment or equivalent is required to test the Regulator Assembly.

1.1 Fluke 801B

1.2 Power Resistor Model 240C

1.3 4140 Chassis

ELECTRICAL ADJUSTMENTS

2.1 Connect the Fluke meter to TP-1 and ground. Adjust R16 to obtain +24V ±10 mv.

2.1.2 Connect the power decade between TP-1 and ground with the Fluke meter. Adjust the power decade for an 800ma load (30 ohms).

2.1.3 Adjust R14 until the voltage at TP-1 suddenly decreases then reverse rotation to restore the voltage. Check on the test record. Remove the load.

2.2 Connect the Fluke meter to TP-2 and ground. Adjust R20 to obtain +15V ±10 mv. Check on the test record.

2.3 Connect the Fluke meter to TP-6 and ground. Adjust R53 to obtain -20V ±10 mv.

2.3.1 Connect the power decade with the Fluke meter to TP-6 and ground. Adjust the power decade for a 800ma load (25 ohms).

2.3.2 Adjust R52 until the voltage at TP-6 suddenly decreases then reverse rotation to restore the voltage. Check on the test record. Remove the load.

2.4 Connect the Fluke meter to TP-3 and ground. Measure and record the voltage. The voltage should be between +9.6V and +14.4V.

2.5 Connect the Fluke meter to TP-4 and ground. Measure and record the voltage. The voltage should be between +5.4V and +6.6V.

2.6 Connect the Fluke meter to TP-5 and ground. Measure and record the voltage. The voltage should be between -7.2V and -8.8V.

Date 5-8-68

ELECTRO-MECHANICAL RESEARCH, INC.

Sarasota, Florida

REGULATOR
ord - Model 4140-05-M5
Assembly No. 6475

No. 6475 S/N _____

PROJECT _____

cedure AP-10412 Rev. _____
Date _____

POA _____

_____ Tested by _____ Reviewed by _____

The paragraph numbers in the test record correspond to the paragraph numbers in the test procedure.

at all equipments have calibration stickers and are within

libration periods _____.

.0 ELECTRICAL ADJUSTMENTS

2.1.3	+24V	Regulator adjusted	_____	(check).
2.2	+15V	Regulator adjusted	_____	(check).
2.3.2	-20V	Regulator adjusted	_____	(check).
2.4	+12V	Regulator	_____	VDC (+9.6V to +14.4V)
2.5	+6V	Regulator	_____	VDC (+5.4V to +6.6V)
2.6	-8V	Regulator	_____	VDC (-7.2V to -8.8V)

by C Hillman

by Eugene Wood

Date 5-8-68

ELECTRO-MECHANICAL RESEARCH, INC.

Sarasota, Florida

LPOF 2P
brd - Model 4140-05-M5
Assembly No. 7527

No. 7527 S/N _____

PROJECT _____

cedure AP-10410 Rev. _____

POA _____

Date _____

_____ Tested by _____ Reviewed by _____

The paragraph numbers in the test record correspond to the paragraph numbers in the test procedure.

at all equipments have calibration stickers and are within

libration periods _____.

.0 Record values of all test variables used on card or mark N.A. if none required.

					(not used on LP)
C3	_____	C40	_____	R61	_____
C4	_____	C41	_____	R62	_____
C20	_____	C42	_____	R63	_____
C21	_____	R46	_____	R64	_____
C35	_____	R48	_____		
C36	_____				
C37	_____				
C38	_____				
C39	_____				

by C Holdwin

by Eugene Ulrich

100 Hz	CA	+6.75 db	9.9 - 10.25 MS	7.00 - 8.4 db	8.54 - 9.09 MS	5.40 - 5.78 MS
	CD	-2.13 db	9.48 - 10.1 MS	NA	NA	7.93- 8.5MS
100kHz	CA	+6.75 db	96 - 102 KHz	4.8 - 7.60 db	96 - 110 KHz	152-174 KHz
	CD	-2.13 db	99 - 120 KHz	NA	NA	114 - 132 KHz
10kHz	CA	+6.75 db	9.6 - 10.9 KHz	6.5 - 8.1 db	10.4 - 11.4 KHz	16.7-17.8 KHz
	CD	-2.13 db	9.8 - 10.4 KHz	NA	NA	11.6-12.3 KHz
1KHz	CA	+6.75 db	0.97 - 1.14 KHz	6.5 - 8.5 db	1.06 - 1.17 KHz	1.70 - 1.82 KHz
	CD	-2.13 db	0.96 - 1.05 KHz	NA	NA	1.15 - 1.24 KHz
09.9 Hz	CA	+6.75 db	9.10 - 10.1 MS	6.4 - 8.0 db	8.65 - 9.43 MS	5.40 - 5.74 MS
	CD	-2.13 db	9.7 - 10.1 MS	NA	NA	8.00 - 8.60 MS
200 Hz	CA	+6.75 db	4.94 - 5.06 MS	7.00 - 8.4 db	4.30 - 4.54 MS	2.70 - 2.87 MS
400 Hz			2.4 - 2.5 MS	7.00 - 8.3 db	2.10 - 2.27 MS	1.30 - 1.44 MS
800 Hz			1.13 - 1.25 MS	6.6 - 8.1 db	1.05 - 1.15 MS	1.39 - 1.50 KHz
11.1kHz			10.5 - 11.9 KHz	6.5 - 8.2 db	11.6 - 12.5 KHz	18.5 - 19.7 KHz
12.2kHz			11.7 - 13.3 KHz	6.5 - 8.2 db	13.0 - 13.6 KHz	20.4 - 21.7 KHz
14.4kHz			13.9 - 16.5 KHz	6.5 - 8.2 db	15.0 - 16.3 KHz	24.0 - 25.7 KHz
18.8kHz			18.0 - 20.4 KHz	6.5 - 8.3 db	20.1 - 21.2 KHz	31.5 - 33.4 KHz
110kHz			105.0 - 116.3 KHz	5.0 - 7.9 db	108 - 121 KHz	170 - 191 KHz
120kHz			112.0 - 126.2 KHz	5.0 - 7.85 db	116 - 132 KHz	185 - 209 KHz
140kHz			132.0 - 147.4 KHz	5.0 - 7.85 db	136 - 154 KHz	214 - 242 KHz
180kHz		+6.75 db	168.0 - 185.8 KHz	5.0 - 7.9 db	171 - 198 KHz	272 - 313 KHz
9.99 Hz	CA	-6.0db	47-51-55 MS	NA	NA	NA
				NOMINAL = 7.25 db	NOMINAL = 1.1 x W1	CA NOMINAL=1.73xW1 CD NOMINAL=1.2 xW1

The CA should be +6.75 db or peak gain, whichever is less.

FINAL TEST PROCEDURE

For

MODEL 4140-05-M5

LIMITER
(6445 M5)

Prepared by C. Holderman Date 5/9/68

Approved by E. West Date 6/6/68

TEST EQUIPMENT

The following test equipment or equivalent is required to test the LIMITER assembly.

1.1 HP-400L

1.2 HP-651A or General Radio 1310-A

1.3 CMC Model 7040

1.4 4140 Chassis

1.5 6445 Adapter Card.

1.6 Simpson 260

1.7 Power Designs 4005 (adjusted for 12 volts)

DYNAMIC RANGE

2.1 Connect an extender card and the 6445 adapter card into J6 of the discriminator.

2.1.1 Connect the limiter card into the adapter card.

2.2 Connect the test equipment as shown in figure 1. Place the VTVM switch in position 6. Connect the scope for EXT Sync at TP-1 of the Limiter card.

2.3 Adjust the input signal generator for 5V p-p at 60 Hz, observe the output on the scope. It should be a symmetrical 7.5V p-p square wave. Check on the test record.

2.3.1 Adjust the input level to 10 mv rms and observe that the output is a symmetrical 7.5V ±.5V square wave. Check on the test record.

2.3.2 Place the VTVM switch in position 4 and observe that the output is a symmetrical 7.5V ±.5V square wave inverted from the waveform observed in 2.3.1.

2.4 Adjust the input signal generator for 3V rms and 2.1 MHz, observe the output on the scope. The output should be a symmetrical 7.0V ±.5V square wave. Check on the test record.

2.4.1 Repeat steps 2.3.1 and 2.3.2.

ZERO SIGNAL CIRCUIT

3.1 Set the input signal generator for 50 mv rms and 2.1 MHz.

3.2 Adjust the Zero Signal control (R72) until the Zero Signal Lamp just comes on.

3.2.1 Place the VTVM switch in 2 position. Observe the DC voltage with the scope. When the Zero Signal Lamp is light the voltage should be $\leq$300 mv DC. Check on the test record.

3.3 Adjust the Zero Signal Control until the Zero Signal Lamp just goes off. Check on the test record.

3.3.1 The DC voltage displayed on the scope should be >10V. Check on the test record.

RELAY MODIFICATION

4.1 Using the ohmmeter, check for an open circuit between Pin 7 of the card and the + terminal of C3.

4.2 Connect the +12V power supply lead to Pin 11 and the - return power supply lead to Pin 9.

4.3 Using the ohmmeter, check for a closed circuit between Pin 7 of the card and the + terminal of C3. Check off.

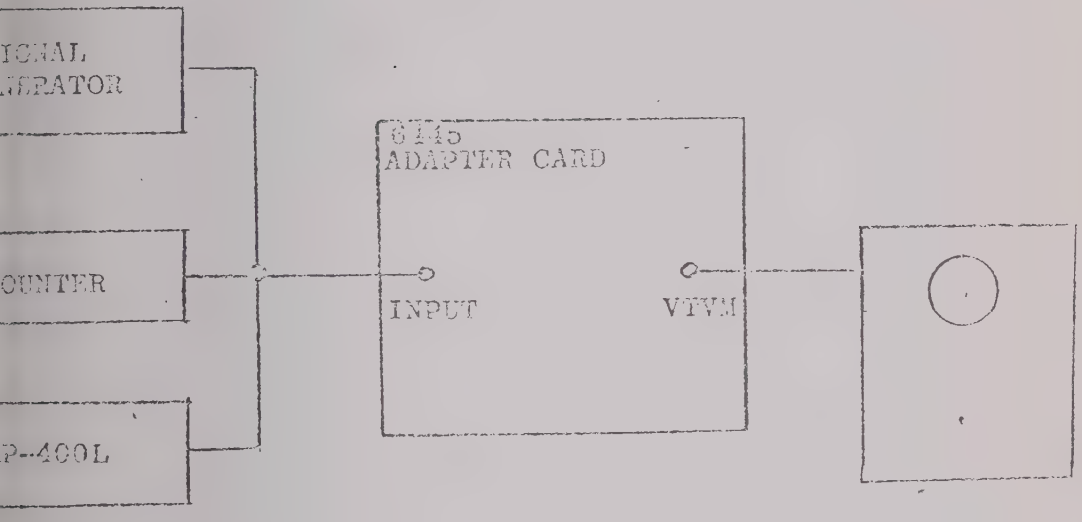

FIGURE I

LIMITER
6445 ADAPTER CARD
T-0155-2

ssis
ector

Card
Connector

Test
Points

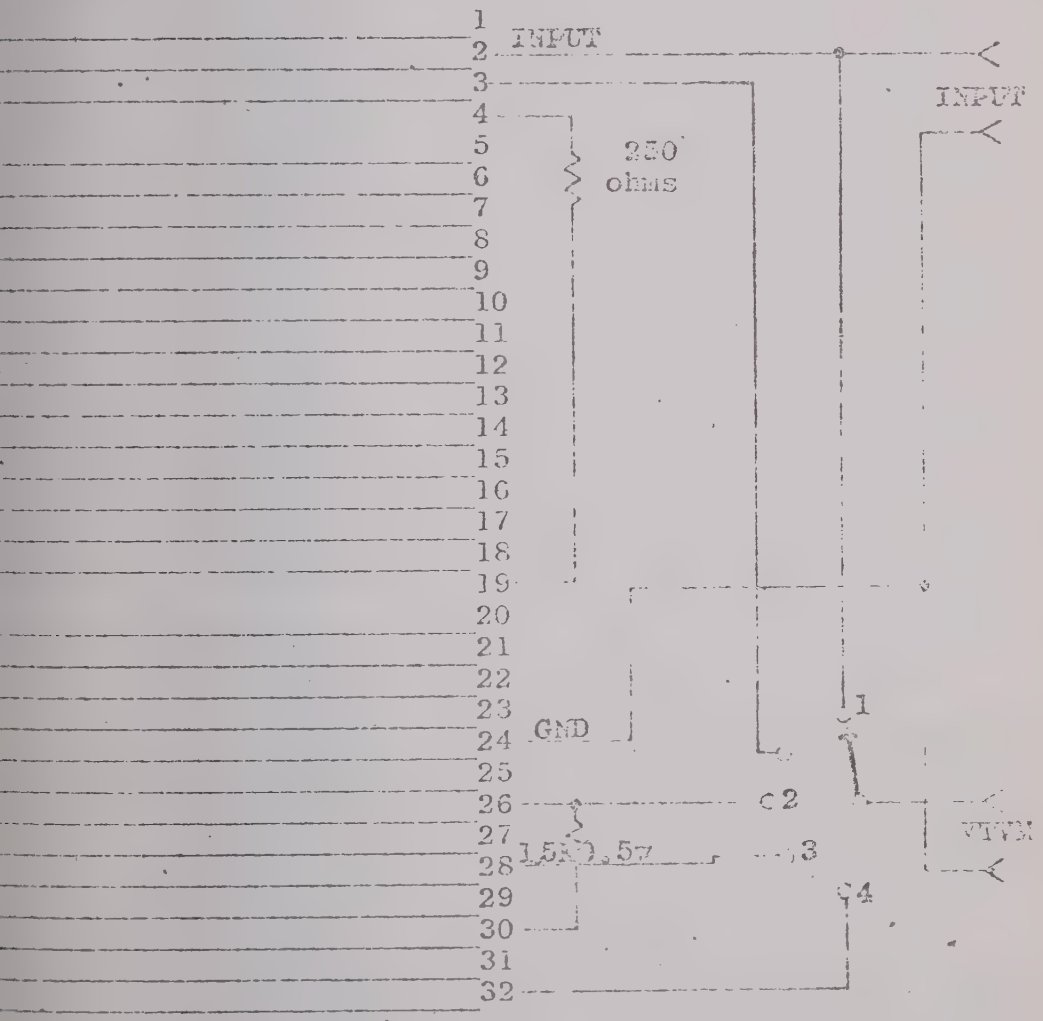

Date 5-8-68

ELECTRO-MECHANICAL RESEARCH, INC.

Sarasota, Florida

LIMITER
rd - Model 4140-05-M5
Assembly No. 6445 M5

NO. 6445 S N _____

PROJECT _____

edure AP-10403

POA _____

_____ Tested by _____ Reviewed by _____

he paragraph numbers in the test record correspond to the aragraph numbers in the test procedure.

t all equipments have calibration stickers and are within

ibration periods _____.

DYNAMIC RANGE

60 Hz 5V rms	_____	(Check)
60 Hz 10 mv rms	_____	(Check)
Inverted Output	_____	(Check)
2.1 MHz 5V rms	_____	(Check)
2.1 MHz 10 mv rms	_____	(Check)
Inverted Output	_____	(Check)

ZERO SIGNAL

Lamp is on	_____	(Check)
< 500 mv output	_____	(Check)
Lamp is off	_____	(Check)
> 10V output	_____	(Check)
Relay	_____	(Check)

red by C H [illegible]

ved by Eugene W [illegible]

FINAL TEST PROCEDURE

For

MODEL 4140-05-M5

LOW PASS OUTPUT FILTER
1P

pared by C. Holderman Date 5/16/68

roved by E. J. West Date 6/6/68

PASS OUTPUT FILTER E POLE (6457)	ORIG. BY C. Holderman	DATE: 5-8-68	PROCESS DWG. NO AP-10409	REV
	APP. BY	DATE:	PAGE ii OF 7	

TEST EQUIPMENT

The following test equipment or equivalent is required to test the LOW PASS OUTPUT FILTER, SINGLE POLE.

1.1 HP-400L (2)

1.2 HP-651A or General Radio 1310-A

1.3 CMC Model 706C

1.4 RCA WV-98A

1.5 Capacitance Meter T-0448

1.6 Power Designs 4005

1.7 4140 Chassis

1.8 6457 Adapter Card

1.9 Precise Decade Resistance 468

PRELIMINARY

2.1 In the event of difficulty in performing the electrical test in Section 3, a troubleshooting guide is given in Table I. This guide is for the purpose of checking the operation of the relays on the card plus give an approximate indication of the values of the switchable components. The accuracy of the component variables are solely a function of the measuring instruments. The capacitance meter accuracy is ±5% full scale and the ohmmeter accuracy is 3 degrees of arc anyplace on the scale.

2.2 Connect the card being tested with an extender card into its proper location in the discriminator. The regulator card should also be installed in the discriminator.

2.3 Connect the ohmmeter and/or capacitance meter to the positions indicated in the LOCATION column of TABLE 1.

2.4 Place the discriminator switches in the positions indicated in the DEV and FREQ. columns and observe the proper value of the component being measured.

2.4.1 A separate test record has been prepared for each assembly 6457, 6457-1, 6457-2. Insure that the assembly number on the test record agrees with the number on the printed circuit card.

2.4.2 Have test jumper permanently installed. (E1 to E3)

ELECTRICAL TESTS

3.1 Connect an extender card and the 6457 adapter card into position J11 in the discriminator chassis. Connect the LOW PASS OUTPUT FILTER, SINGLE POLE, into the adapter card.

3.2 Place the VTVM switch on the adapter card in the OUTPUT position. Connect the test equipment as shown in Figure 1.

3.3 Set the input oscillator to 1 kHz as indicated by the dial reading of the oscillator. Set the low pass switches on the discriminator to 80 kHz, CD.

3.4 Adjust the amplitude of the oscillator to obtain 0 db on the 3V scale of the output VTVM. Note the voltage indicated on the input VTVM, this voltage level should be within 0.1 db of the output voltage. Check on the test record.

3.4.1 A switch position was included on the VTVM switch to facilitate checking the tracking of the two VTVM's. The purpose of using two VTVM's is to reduce the number of switch movements with each measurement.

3.5 Sweep the input frequency, maintaining constant amplitude, to determine the frequency at which 3 db attenuation occurs. If the frequency is within the allowable limits given in TABLE 4, check the appropriate box.

3.6 Repeat step 3.5 for each of the conditions in TABLE 4.

3.6.1 On low frequency switch positions the frequency limits are expressed in time limits. Therefore, when time limits are given, the frequency counter should be set to measure period.

3.6.2 Determine the frequency at which the attenuation occurs in TABLE 2. If the frequency is within the allowable limits, check the appropriate box in TABLE 2.

3.7 Place the VTVM switch in the DC position and adjust the input oscillator to 10 Hz and 1V rms at the input.

3.7.1 Observe the voltage at the output VTVM. The output voltage should be between 0.2 and 0.3V rms. Check on the test record.

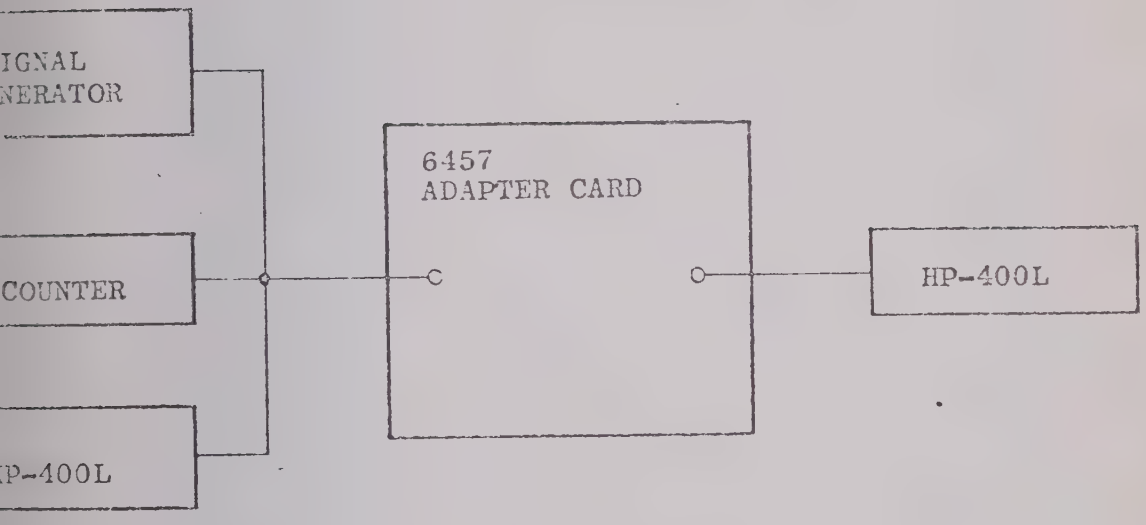

FIGURE I

TELEMETRY DIVISION
ELECTRO MECHANICAL RESEARCH INC

MODEL NO.
LPOF 1P
4140-05-M5

ADAPTER CARD

...sis ...ctor	Card Connector		Test Points
	1		
	2		
	3		
	4		
	5		
	6		
	7		
	8		
	9		
	10		
	11		
	12		
	13		
	14	GND	
	15		
	16		
	17		
	18	OUTPUT	
	19		
	20		
	21		
	22		
	23		
	24		
	25		
	26	INP	
	27		
	28		
	29		
	30		
	31	INPUT	VTVV
	32	DC	

L.P.O.F. SINGLE POLE AP-10409

TABLE 1 REF. _____

ASSEMBLY NO. 6457

SWITCHES			MEASUREMENT			
[illegible]	MSB	FREQ.	R	R SYMBOL	C	C SYMBOL
	OFF	101.Hz	2 M	R13	----	----
		102.Hz	1 M	R12	----	----
		104,Hz	510K	R6	----	----
		108.Hz	240K	R5	----	----
		110.Hz	200K	R19	----	----
		120.Hz	100K	R18	----	----
		140.Hz	49.9	R17	----	----
		180.Hz	24.9	R16	----	----
	ON	100.Hz	20K	R23	----	----
	OFF	200.Hz	10K	R22	----	----
		400.Hz	4.99K	R21	----	----
		800.Hz	2.49	R20	----	----
C4		100.kHz	----	----	33 pf	C32
					21 pf	
					15 pf	
		10.0kHz	----	----	560 pf	C26
					510 pf	
					470 pf	
		1.00kHz		-	6200 pf	C24
					5800 pf	
					5000 pf	
		100.Hz	----	----	.062	C7
					.058	
					.05	

L.P.G.F. SINGLE POLE
TABLE 1
ASSEMBLY NO. [illegible]

AP-10409
E. [illegible]

	SWITCHES			MEASUREMENT			
[illegible]	CA-CD	MSD	FREQ.	R	R SYMBOL	C	C SYMBOL
3	CA	CMT	10.0 Hz	-----	-----	[illegible]	C8
						.64	
						.55	
			1.00 Hz	-----	-----	6.8	C12, C20
						6.5	
						5.5	
	CD		100. kHz	-----	-----	10 pf	C31
						21 pf	
						20 pf	
			10.0 kHz			[illegible] pf	C2[illegible]
						430 pf	
						51[illegible] pf	
			1.00 kHz			4300 pf	C22
						4 00 pf	
						5400 pf	
			100, Hz			.043	C15
						.04[illegible]	
						.054	
			10.0 Hz			.4 9	C16
						.52	
						.594	
			1.00 Hz			4.[illegible]	C10, C1[illegible]
						5.2	
						6.0	

Date 5-8-68

ELECTRO-MECHANICAL RESEARCH, INC.

Sarasota, Florida

IPOF 1P

ord - Model 4140-05-M5
Assembly No. 6457

NO. 6457 S N _____

PROJECT _____

cedure AP-10409 R . _____

Date _____

POA _____

_____ Tested by _____ Reviewed by _____

The paragraph numbers in the test record correspond to the paragraph numbers in the test procedure.

at all equipments have calibration stickers and are within

libration periods _____.

4	Gain	_____	(Check)	(0 ± 0.1 db)
7.1	DC Output	_____	(Check)	(0.2 - 0.3V rms)

by C Holdman

by Eugene Wick

SETTING	CD	GAIN	✓	FREQUENCY LIMITS	✓	PEAK GAIN LIMITS	✓	PEAK FREQUENCY LIMITS	✓	LIMITS
100 Hz	CA	2.43 db		9.85 - 10.1 MS		N.A.		N.A		8.210-9.074 MS
	CD	1.31 db		9.[illegible] - 10.1 MS						5.[illegible]8-6.250 MS
100kHz	CA	2.43 db		99 - 101 KHz						113.8-118.2KHz
	CD	1.31 d[illegible]		99 - 101 [illegible]						159.[illegible]-18[illegible].5KHz
10kHz	CA	2.43 d[illegible]		9.90 - 10.30[illegible]z						11.02-12.1[illegible]Hz
	CD	1.31 d[illegible]		9.90 - 10.1 KHz						15.9[illegible]-17.64[illegible]z
1kHz	CA	2.43 d[illegible]		990 - 1015 [illegible]z						1.102-1.21[illegible]z
	CD	1.31 d[illegible]		990 - 1010 [illegible]z						1.59[illegible]-1.[illegible]34 [illegible]z
99.9 Hz	CA	2.43 d[illegible]		9.9 - 10.2 [illegible]S						[illegible].210-9.074 [illegible]S
	CD	1.31 db		9.7 - 10.1 [illegible]S						5.6[illegible]8-[illegible].250 [illegible]S
200 Hz		2.43 d[illegible]		4.90 - 5.6[illegible] MS						4.105-4.537 [illegible]S
400 Hz				2.45 - 2.53 [illegible]S						2.052-2.2[illegible]2 [illegible]S
800 Hz				1.215 - 1.2[illegible]0MS						1.026-1.134 [illegible]S
1.1kHz				11.0 - 11.5 [illegible]Hz						12.0 -14.0 [illegible]Hz
2.2kHz				12.1 - 12.[illegible] KHz						13.2-15.4 [illegible]Hz
4.4kHz				1[illegible].2 - 1[illegible].0 KHz						15.[illegible]-1[illegible].[illegible] [illegible]Hz
8.8kHz				1[illegible].5- 19.[illegible] [illegible]Hz						20. -23.4 [illegible]Hz
110kHz				10[illegible].9- 112.4Khz						122 -134 [illegible]Hz
120kHz				11[illegible].[illegible]- 123.5K[illegible]z						133 - 14[illegible] [illegible]Hz
140kHz				13[illegible].6- 14[illegible] [illegible]Hz						158 - 174 [illegible]Hz
180kHz		-2.43 db		17[illegible].2- 190 [illegible]z						202 - 224 [illegible]Hz
9.99 Hz	CA	-6.0db		49.0 - 54.0 [illegible]S		NA		NA		NA

FINAL TEST PROCEDURE

For

MODEL 4140-05-M5

VOLTAGE SWITCH

(6451 M5)

Prepared by C. Holderman Date 5/29/68

Approved by E. J. West Date 6/6/68

TEST EQUIPMENT

The following test equipment or equivalent is required to test the Voltage Switch Assembly.

1.1 Tektronix 535 with C-A Plug-In

1.2 Fluke 801B

1.3 RCA WV-98A

1.4 Capacitance Meter T-0448

1.5 Power Designs 4005 (1)

1.6 4140 Chassis

1.7 6451 Adapter Card

1.8 Precise Decade Resistance 468

PRELIMINARY

2.1 In the event of difficulty in performing the electrical test in section 3, a troubleshooting guide is given in TABLE I. This guide is for the purpose of checking the operation of the relays on the card plus give an approximate indication of the values of the switchable components. The accuracy of the component variables are solely a function of the measuring instruments. The capacitance meter accuracy is ± 5% full scale and the ohmmeter accuracy is 3 degrees of arc any place on the scale.

2.2 Connect the card being tested with an extender card into its proper location in the discriminator. The regulator card should also be installed in the discriminator.

2.3 Connect the ohmmeter and/or capacitance meter to the positions indicated in the LOCATION column of TABLE 1.

2.4 Place the discriminator switches in the positions indicated in the DEV and FREQ. columns and observe the proper value of the component being measured.

ELECTRICAL TESTS

3.1 Connect the extender card and the 6451 adapter card into J10 of the discriminator chassis. Connect the VOLTAGE SWITCH card into the adapter card.

3.2 Connect the test equipment as shown in Figure 1. Connect the Fluke meter to TP-2.

3.3 Place the ZERO SIGNAL switch in the ON position. Adjust R29 to obtain 0V ± 5MV DC as observed with the Fluke meter. Check on the test record.

3.4 Place the ZERO SIGNAL switch in OFF.

3.4.1 Place the INPUT switch in 1 position and observe the waveform at TP-1. The oscilloscope should be externally synchronized to the toggle switch center arm. The waveform should be a symmetrical square wave between the limits of ± 4V. Check on the test record.

3.4.2 Place the INPUT switch in 2 position and again observe the waveform. The waveform should be the same as observed in 3.4.1.

3.4.3 Switch the S1 control on the rear of the discriminator between its 2 positions and observe that the waveform at TP-1 reverses polarity. Check on the test record.

3.4.4 Observe the waveform at TP-2, the square wave should be ± 5V. Check on the test record.

3.5 Rotate the Percent Deviation switch through all of its positions and observe that the Out of Range light remains extinguished. Check on the test record.

3.6 Connect a power supply to the + side of C29 to supply a negative voltage.

3.6.1 Place the Deviation switch in the 7.5% position. Adjust the power supply to a voltage that will just cause the Out of Range lamp to come on. Measure and record the power supply voltage. It should be -1V ± 10%.

3.6.2 Place the Deviation switch in the 15% position. Adjust the power supply to a voltage that will just cause the Out of Range Lamp to come on. Measure and record the power supply voltage. It should be -1.5V DC ± 10%.

3.6.3 Place the Deviation switch on the 30% position. Adjust the power supply to a voltage that will just cause the Out of Range Lamp to come on. Measure and record the power supply voltage. It should be -3.1V DC ± 10%.

3.6.4 Place the Deviation switch in the 40% * position. Adjust the power supply to a voltage that will just cause the Out of Range Lamp to come on. Measure and record the power supply voltage. It should be -2V DC ± 10%.

3.6.5 Place a jumper from pin 17 of the card to GND. Adjust the power supply to a voltage that will just cause the Out of Range Lamp to come on. Measure and record the power supply voltage. It should be -6V DC ± 10%. Remove jumper.

7 Connect the power supply to now supply a positive voltage to the + side of C29.

3.7.1 Repeat steps 3.6.1, 3.6.2, 3.6.3, 3.6.4 and 3.6.5, only the polarity of the voltage limits are changed.

* Actually 20% Dev. for M5.

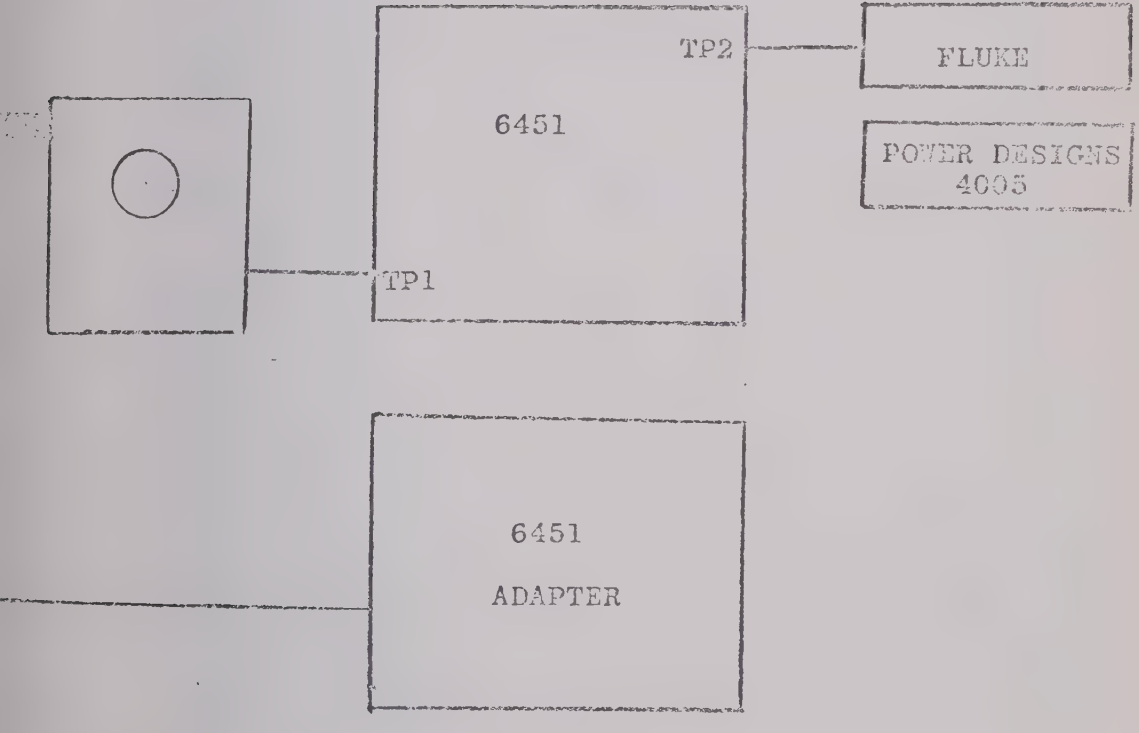
TP2
FLUKE
6451
POWER DESIGNS
4005
TP1

6451
ADAPTER

ADAPTER CARD

sis
ctor

Card
Connector

Test
Points

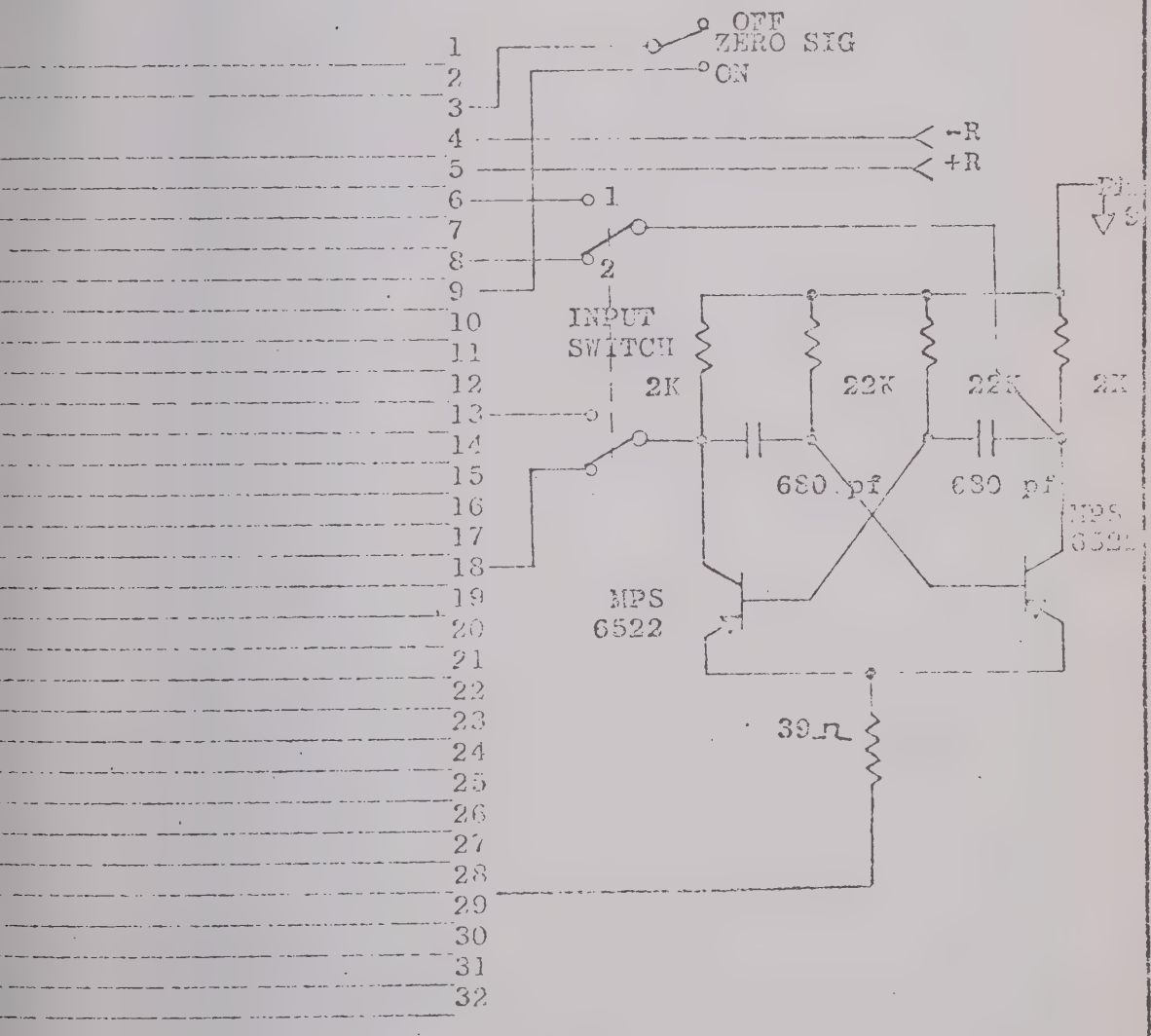

VOLTAGE SWITCH
ASSEMBLY 6451 M5

TABLE 1

	SWITCHES		MEASUREMENT			
ION	DEV.	FREQ.	R	R SYMBOL	C	C SYMBOL
3	7.5 15 30 40 (20)	0000 ↓ ↓	301K 205K 95.3K 147K	R63 R71 R78 R89		
6	7.5 15 30 40(20)	0000 ↓ ↓	402K 274K 127K 205K	R62 R70 R77 R83		
7	Polarity + -	0000 "	0 Infinity	E1 K1		
8	- +	0000 "	0 Infinity	K2 K2		
3			75K	R100		
5			100K	R101		

Date 5-29-68

ELECTRO-MECHANICAL RESEARCH, INC.

Sarasota, Florida

VOLTAGE SWITCH

rd - Model 4140-05-M5 No. 6451 S/N _____

Assembly No. 6451-M5

PROJECT _____

edure AP-.10408 Rev. _____

Date _____

POA _____

_____ Tested by _____ Reviewed by _____

he paragraph numbers in the test record correspond to the aragraph numbers in the test procedure.

t all equipments have calibration stickers and are within

ibration periods _____.

TRICAL TESTS

R29 adjusted _____ (check).

1 Symmetrical Square Wave _____ (check).

2 Symmetrical Square Wave _____ (check).

3 Reverse Polarity _____ (check).

4 ± 5V Square Wave _____ (check).

Out of Range-Off _____ (check).

1 7.5% (-0.9V to -1.1V) _____ VDC.

2 15% (-1.35V to -1.65V) _____ VDC.

3 30% (-2.8V to -3.4V) _____ VDC.

4 40% * (-1.8V to -2.2V) _____ VDC.

5 40%(M5) (-5.4V to -6.6V) _____ VDC

1 7.5% (+0.9V to +1.1V) _____ VDC

15% (+1.35V to +1.65V) _____ VDC

30% (+2.8V to +3.4V) _____ VDC

40% (+1.8V to +2.2V) _____ VDC

40%(M5)(+5.4V to +6.6V) _____ VDC

*Actually 20% Dev. for M5.

by _____ Approved by _____

FINAL TEST PROCEDURE

For

MODEL 4140-05-M5

TAPE SPEED COMPENSATION

(6469-1)

Prepared by C. N. Holderman Date 5/8/68
C. Holderman

Approved by E. West Date 5/8/68
E. West

TEST EQUIPMENT

The following test equipment or equivalent is required to test the Tape Speed Compensation Assembly.

1.1 Tektronix 535 with C-A Plug-In

1.2 HP-651A or General Radio 1310-A

1.3 RCA WV-98A

1.4 Fluke Model 801B

1.5 Oven Delta Design 6545W

1.6 4140 Chassis

1.7 6469 Adapter Card

1.8 6445 Adapter Card

1.9 Precise Decade Resistance 468

1.10 Cable extender for Oven

1.11 CMC Model 706C

PRELIMINARY

2.1 Connect the card being tested with an extender card into its proper location in the discriminator. The regulator card should also be installed in the discriminator.

TIMING ADJUSTMENT

NOTE: This test must be performed with the customer's mating Limiter card (6445) and the mating Detector card (6448).

3.1 Connect the 6469 adapter card and the TSC card into J4 of the discriminator. Connect the mating Limiter (with adapter card) and Detector cards into J6 and J8 respectively; do not use extender cards. Connect a Voltage Switch card into J10; do not use an extender. Ground the TSC input of the discriminator.

3.2 Connect the test equipment as shown in Figure 1.

3.2.1. Connect a decade resistance box for R64 on the TSC card.

3.2.2 Adjust the input frequency to 10,000 μs $\pm$ 10 μs.

3.2.3 Set the switches on the discriminator to 100 Hz $\pm$ 7.5%.

3.2.4 Temporarily reduce the input signal amplitude sufficiently to cause the ZERO SIGNAL light to come on.

3.2.4.1 Adjust the potentiometer (R29) on the Voltage Switch card to zero the output on the Fluke meter.

3.2.4.2 Return the input signal level to a normal operating range. Place the Deviation Polarity switch in the minus position.

3.3 Adjust the decade resistance box to obtain approximately 0V DC. Note the exact reading on the Fluke meter and do not change the setting of the decade until this test is completed.

3.4 Change the input frequency to 5000 μs $\pm$ 5 μs and the discriminator to 200 Hz.

Measure and note the DC output on the Fluke meter at TP-2 of the Voltage Switch card.

3.5 Change the input frequency and the discriminator to 2500 μs $\pm$ 3 μs. Measure and note the voltage reading on the Fluke.

3.6 Change the input frequency to 1250 μs $\pm$ 2 μs and the discriminator to 800 Hz. Measure and note the voltage reading on the Fluke.

3.7 Determine at what setting (100 Hz, 200 Hz, 400 Hz or 800 Hz) the voltage at TP-2 of the voltage switch was most positive.

3.7.1 Adjust the input generator and the discriminator to the settings which produced the most positive voltage.

3.7.2 Adjust the decade resistance box, which is connected to the TSC card, to cause the voltage to go to zero. This process will only zero one of the conditions (100 Hz, 200 Hz, 400 Hz or 800 Hz) in order to zero the other cases it will be necessary to adjust the timing resistors on the Detector card. Record resistor value of R64.

3.8 Adjust the input oscillator and the center frequency switches on the discriminator for each of the conditions which are not zero.

3.8.1 To zero at 100 Hz, a resistor should be selected for R84 or R85 on the Detector card. Record the resistor value installed.

3.8.2 To average at 200 and 300Hz, a resistor should be selected for either R82 or R83. Record the resistor value installed.

3.8.3 To average at 400, 500, 600 and 700Hz, a resistor should be selected for either R80 or R81. Record the resistor value installed.

3.8.4 To average at 800 and 900Hz, a resistor should be selected for either R1 or R2. Record the resistor value installed.

3.9 Adjust the input oscillator to 100KHz $\pm$ 100 Hz and the discriminator to 100KHz. Tack in a resistor for R67 which is approximately equal in value to R64. Record resistor value of R67.

3.9.1 Measure the voltage at TP-2 of the Voltage switch and select equal capacitors C31 and C36, on the Detector card, to zero the output voltage. Record the capacitor values.

3.9.2 After C31 and C36 have been selected, compare the balance between the + and - sensitivities at 1MHz. If the balance differs by more than 1V it will be necessary to select transistors in the flip flop on the voltage switch card to decrease the differences.

3.10 Adjust the input oscillator to 10 kHz ± 10 Hz and the discriminator to 10 kHz.

3.10.1 Measure the voltage at TP-2 of the Voltage Switch and select R66, on the TSC card, to zero the output voltage. Select the resistor to average the reading between 10 KHz and 90 KHz. Record resistor value.

3.11 Adjust the input oscillator to 1 kHz ± 1 Hz and the discriminator to 1 kHz.

3.11.1 Measure the voltage at TP-2 of the Voltage Switch and select R65, on the TSC card, to zero the output voltage. Select resistor to average readings between 1 KHz and 9 KHz. Record resistor value.

3.12 Adjust the input oscillator to 1 MHz ± 1 kHz and the discriminator to 1 MHz.

3.12.1 Measure the voltage at TP-2 of the Voltage Switch and select a resistor for R62, on the TSC card, to zero the output voltage. Select resistor to average readings between 1.0 MHz and 1.5 MHz.

3.13 Adjust the input oscillator to 200 kHz and 300 kHz, within ± 0.1%. Correspondingly, set the discriminator to 200 kHz and 300 kHz and observe the output voltage.

3.13.1 Select a resistor value for R11 on the TSC card which will best center the voltage output around zero. Record the resistor value.

3.14 In a similar manner to 3.13 select a resistor value for R13 on the TSC card which will best average the voltage at 400 kHz, 500 kHz, 600 kHz and 700 kHz. Record the resistor value.

3.15 Select a resistor for R50 on the TSC card which will best average the output voltage at 800 kHz and 900 kHz. Record the resistor value.

TEMPERATURE COMPENSATION

4.1. Connect the 6469 adapter card into J4 of the discriminator. Connect the oven cable into the adapter card and the TSC card into the oven cable. Connect a decade resistance box in place of R44 on the TSC card, set the decade box for 0 ohms. Connect Fluke meter to TP-3 on limiter card.

4.2 Place the TSC card inside the temperature chamber and set the temperature for 25°c. Allow sufficient time for the unit to stabilize as determined by the voltage observed with the Fluke meter.

4.3 Vary the resistance box in 500 ohm steps to 5K and note the voltage reading with the Fluke meter.

4.4 Raise the temperature of the oven to 50° C and again allow the card to stabilize.

4.4.1 Vary the resistance box in 500 ohm steps from 0 to 5K and note the voltage reading with the Fluke meter.

4.4.2 Compare the voltage readings in 4.3 and 4.4.1 and determine the resistance value which would compensate for the voltage variation due to temperature change. Record the resistance value determined for R44.

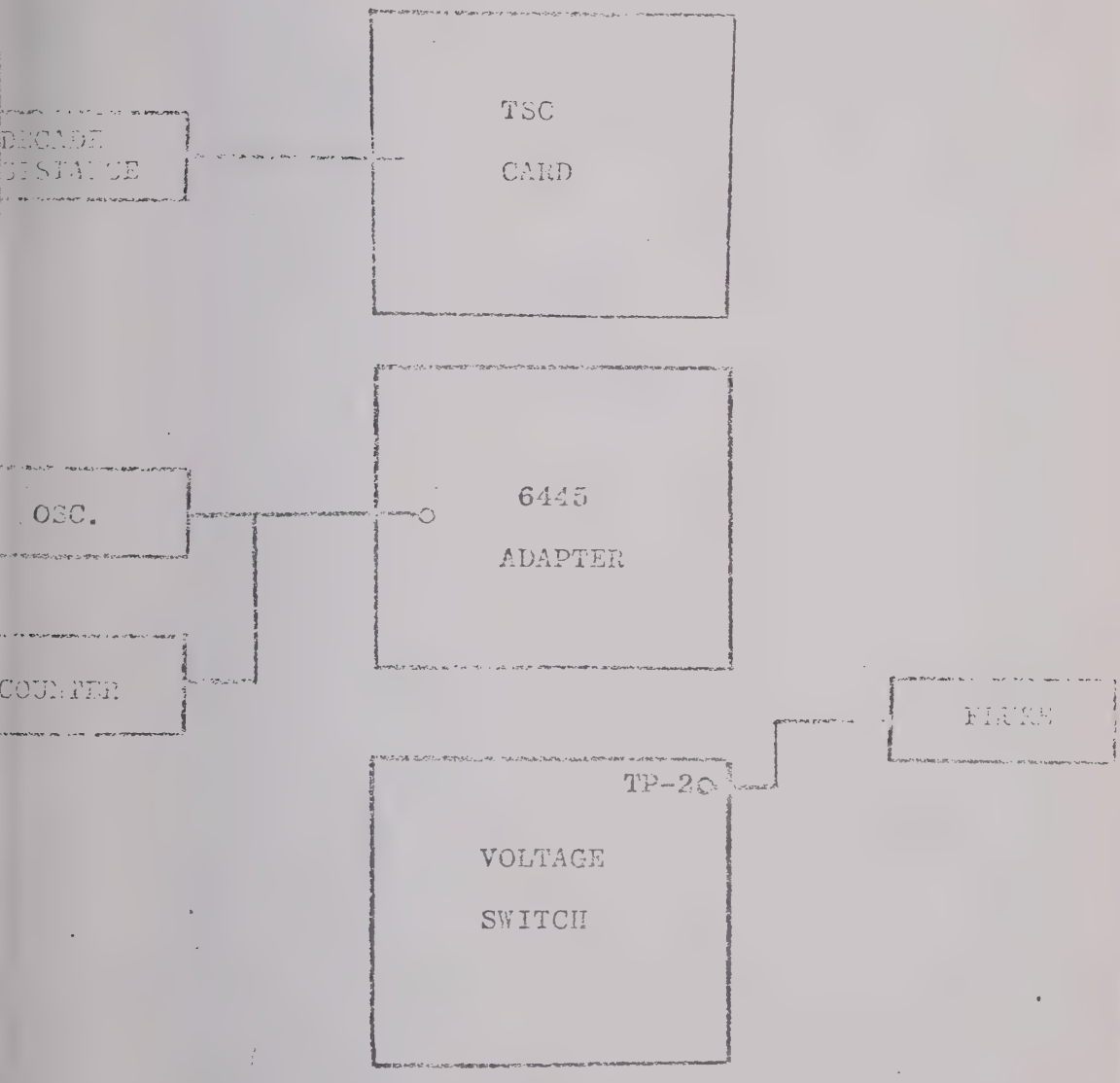

FIGURE 1

TSC

6468 ADAPTER CARD

	Card Connector	Test Points
	1	
	2	
	3	
	4	
	5	
	6	
	7	
	8	
	9	
	10	
	11	
	12	
	13	
	14	
	15	
	16	
	17	
	18	
	19	
	20	
	21	
	22	
	23	
	24	
	25	
	26	
	27	
	28	
	29	
	30	
	31	
	32	

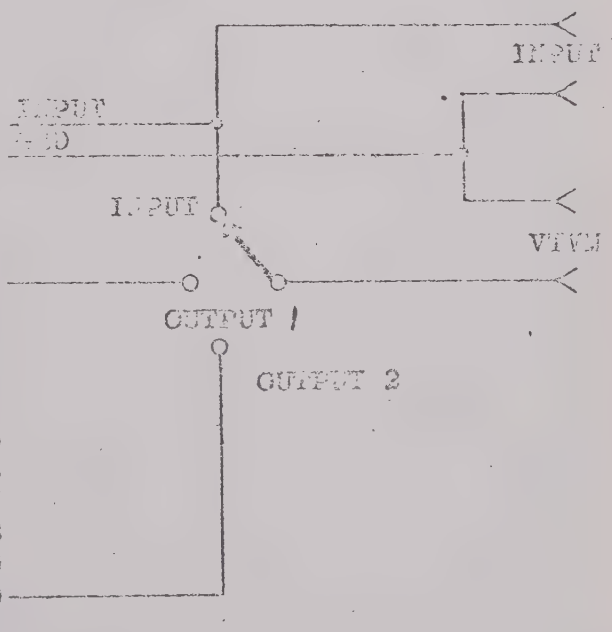

Date 5-8-68

ELECTRO-MECHANICAL RESEARCH, INC.

Sarasota, Florida

TSC

ord - Model 4140-05-M5
Assembly No. 6469-1

No. 6445 S/N _____

No. 6448 S/N _____

No. 6469-1 S/N _____

cedure AP-10407 _____

PROJECT _____

POA _____

_____ Tested by _____ Reviewed by _____

The paragraph numbers in the test record correspond to the paragraph numbers in the test procedure.

t all equipments have calibration stickers and are within their

on periods _____.

TIMING ADJUSTMENTS

3.7.2	R64 _____ohms (TSC)	
3.8.1	R84 _____ohms or R85 _____ohms	(Det)
3.8.2	R82 _____ohms or R83 _____ohms	(Det)
3.8.3	R80 _____ohms or R81 _____ohms	(Det)
3.8.4	R1 _____ohms or R2 _____ohms	(Det)
3.9	R67 _____ohms (TSC)	
3.9.1	C31 & C36 _____ (Det)	
3.10.1	R66 _____ohms (TSC)	
3.11.1	R65 _____ohms (TSC)	
3.12.1	R62 _____ohms (TSC)	
3.13.1	R11 _____ohms (TSC)	
3.14	R13 _____ohms (TSC)	
3.15	R50 _____ohms (TSC)	

EMPERATURE COMPENSATION

.4.2 R44 _____ohms (TSC)

d by C Hillman

d by Eugene West

MANUFACTURING TEST PROCEDURE

For

4140-05-M5

BANDPASS INPUT FILTER
SECTION II
(6466 M5)

Prepared by C. Holderman Date 5/10/68

Approved by E. West Date 6/6/68

DPASS INPUT FILTER
TION II (6466 M5)

CHKD. BY	DATE:	PROCESS DWG. NO	
C. Holderma	5-8-68	AP-10406	
APP. BY	DATE:		REV
		PAGE ii OF 8	

TEST EQUIPMENT

The following test equipment or equivalent is required to test the Bandpass Input Filter, Section II, Assembly.

1.1 HP-400L (2)

1.2 HP-651A or General Radio 1310-A

1.3 CMC Model 706C

1.4 RCA WV-98A

1.5 Capacitance Meter T-0448

1.6 Power Designs 4005

1.7 4140 Chassis

1.8 6463/6466 Adapter Card

1.9 Precise Decade Resistance 468

PRELIMINARY

2.1 In the event of difficulty in performing the electrical tests in section 3, a troubleshooting guide is given in TABLE I. This guide is for the purpose of checking the operation of the relays on the card plus give an approximate indication of the values of the switchable components. The accuracy of the component variables are solely a function of the measuring instruments. The capacitance meter accuracy is ±5% full scale and the ohmmeter accuracy is 3 degrees of arc anyplace on the scale.

2.2 Connect the card being tested with an extender card into its proper location in the discriminator. The regulator card should also be installed in the discriminator.

2.3 Connect the ohmmeter and/or capacitance meter to the positions indicated in the LOCATION column of TABLE I.

2.4 Place the discriminator switches in the positions indicated in the DEV and FREQ. columns and observe the proper value of the component being measured.

ELECTRICAL TESTS

3.1 Connect the BPIF SEC II card into its proper location in the discriminator chassis (J3). Connect the M5 INPUT card in its proper location in the discriminator chassis, (J2), using the 6463/6466 adapter card.

3.2 Temporarily connect the input VTVM to terminal E12 and the output VTVM to TP-1 on the BPIF SEC II card. Connect the remainder of the test equipment as shown in Figure 1.

3.2.1 Adjust the signal generator for 1 kHz and 1V rms at E12. Observe the amplifier gain on the output VTVM.

3.3 Connect a decade resistance box between terminals E1 and E2 and adjust the resistance to obtain 2.5V rms (gain = 2.5). Have the nearest 1% resistance value installed and recheck the gain of the amplifier. Record the resistance value of R49.

3.4 Check the peak gain and frequency at the dial settings of 010.0 kHz, 01.00 kHz, and 0.100 kHz as follows:

3.4.1 Set the center frequency switch on the discriminator to the correct position per 3.4 above and the Dev. Switch to ±7.5% position. Connect the input VTVM to E15 on the BPIF II Card.

3.4.2 Adjust the signal generator for a 0 db on the 0.3V scale of the input VTVM and sweep the input frequency to obtain the peak output voltage at TP-1. The nominal peak gain and peak frequency is indicated in TABLE 2 of the test record. Check the appropriate boxes in TABLE 2.

3.5 Set the center frequency and deviation switches on the discriminator in the 100 kHz ±7.5% positions.

3.5.1 Adjust the input generator for 0 db on the 3V scale of the input VTVM and sweep the input frequency to obtain the peak output voltage at TP-1. The nominal peak gain and peak frequency is indicated in TABLE 2.

3.5.2 Repeat 3.5.1 for the 200 kHz ±7.5% case. The capacitors indicated in the Ca and Cb columns should be selected to obtain the nominal value of peak gain and frequency. Check the appropriate boxes in TABLE 2 and record the capacitor values selected.

3.5.3 Repeat 3.5.1 for the 300 kHz ±7.5% case. If the peak gain and frequency is out of the allowable limits capacitors C48 and C49 should be selected to obtain the proper response.

3.5.3.1 Repeat steps 3.5, 3.5.1, and 3.5.3 until satisfactory results can be obtained. Record the final capacitance values installed and check the appropriate boxes in TABLE 2.

3.5.4 Measure and/or adjust the peak gain and peak frequency of the remaining positions in TABLE 2.

3.5.4.1 Check the appropriate boxes and record the capacitance values installed on the card to obtain satisfactory operation as determined by the limits in TABLE 2. On low frequency switch positions the frequency limits are expressed in time limits. Therefore, when time limits are given, the frequency counter should be set to measure period.

3.6 Connect the LPIF II card with an M5 INPUT card and a BPIF I to make a composite bandpass filter. Check the bandedge attenuation (3 ±1 db) at each of the dial settings at 7.5%, 400 Hz, 1.3 kHz, 10 kHz, 10.5 kHz, 70 kHz, 93 kHz, 100 kHz, 110 kHz, 124 kHz, 165 kHz, 180 kHz, 200 kHz, 400 kHz, 700 kHz, 800 kHz and 1 mHz. Check the bandedge attenuation (3 ±1 db) at 100 kHz and deviations of 15%, 30% and 40% (actually 20% for M5). Readjust the BPIF II card if necessary.

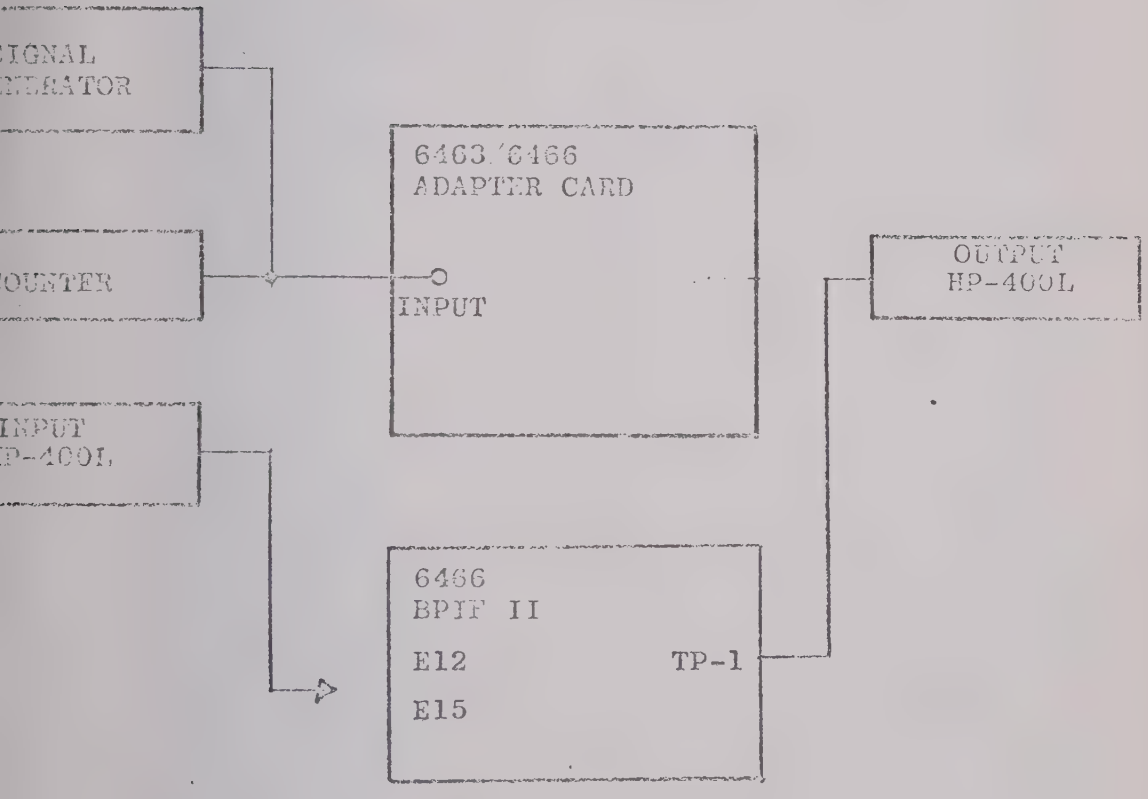

FIGURE I

PASS INPUT FILTER	ORIG. BY C. Holderman	DATE: 5-8-68	ENGRG. DWG. NO. AP-10406
ION II (6466 M5)	APP. BY	DATE:	PAGE 5 OF 8

TELEMETRY DIVISION

ELECTRO MECHANICAL RESEARCH INC

MOD[illegible] INC.

BPIF II

4[illegible]-05-M5

6[illegible]3/6[illegible] BPIF 1 & 2

ADAPTER CARD

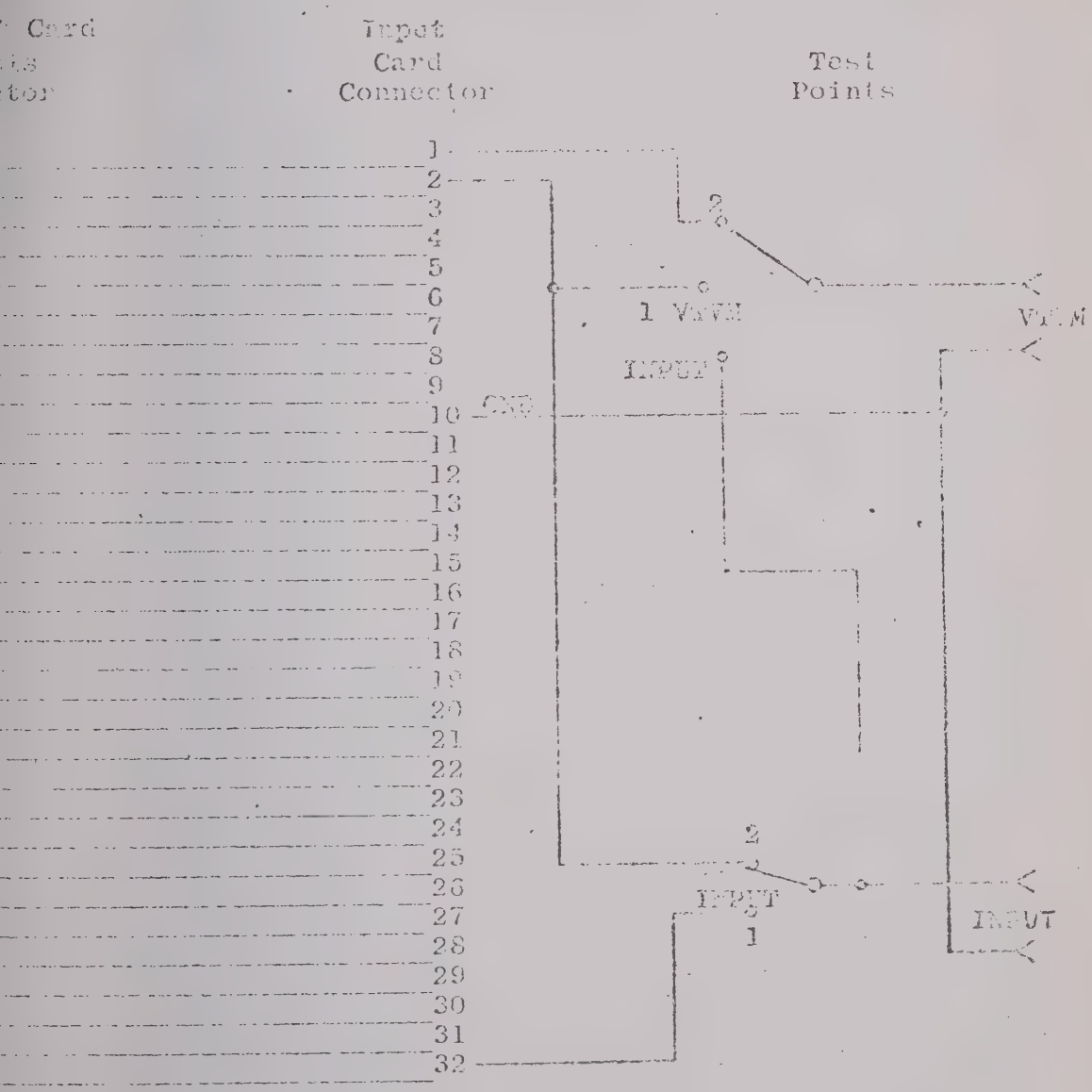

ON PASS INPUT FILTER [illegible] II (6466 M5)	ORIG. BY C. Holderman	DATE 5-8-68	PROCESS DWG. AP-10406
	APP. BY		PAGE 6 OF

"PIF SEC II
ASSEMBLY NO. [illegible] M5

Table 1

SWITCHES		MEASUREMENT				
% DEV	FREQ.	R	R SYMBOL	C	C SYMBOL	
7.5	1.000MHz	1K	R4		C2	
	0100.kHz	10K	R12		C6	
	0200.kHz	4.99K	R17		C13	
	0400.kHz	2.49K	R29		C15	
	0800.kHz	1.24K	R33		C17	
	0010.kHz	100K	R35		C19	
	0020.kHz	49.9K	R37		C21	
	0040.kHz	24.9K	R42		C25	
	0080.kHz	12.4K	R46		C29	
	0001.kHz	1 M	R57	---	---	
	0002.kHz	510K	R60	---	---	
	0004.kHz	240K	R62	---	---	
	0008.kHz	120K	R64	---	---	
7.5	1.000MHz	1K	R3		C1	
	0100.kHz	10K	R11		C5	
	0200.kHz	4.99K	R16		C12	
	0400.kHz	2.49K	R28		C14	
	0800.kHz	1.24K	R32		C16	
	0010.kHz	100K	R34		C18	
	0020.kHz	49.9K	R36		C20	
	0040.kHz	24.9K	R41		C24	
	0080.kHz	12.4K	R45		C28	
	0001.kHz	1 M	R56	---	---	
	0002.kHz	510K	R59	---	---	

BPIF SEC II
ASSEMBLY NO. 6436 M5

AD-10406
REV.

Table 1 (cont'd)

N	SWITCHES % DEV	SWITCHES FREQ.	MEASUREMENT R	MEASUREMENT R SYMBOL	MEASUREMENT C	MEASUREMENT C SYMBOL
	7.5	0001.kHz	240K	R61	---	---
		0008.kHz	120K	R63	---	---
		010.0kHz	---	---	2550	C41
		01.00kHz	---	---	.0269	C44
		0.100kHz	---	---	.271	C40
	7.5	0100.kHz	---	---	82	C42
	15		---	---	100	C38
	30		---	---	100	C32
	40(20)		---	---	85	C30
	7.5	010.0kHz	10K	R68	---	---
	15		7.32K	R67	---	---
	30		3.48K	R66	---	---
	40(20)		6.19K	R65	---	---
	7.5	0100.kHz	---	---	110	C47
	15		---	---	100	C39
	30		---	---	68	C34
	40(20)		---	---	140	C31
	7.5	010.0kHz	---	---	1500	C45
		01.00kHz	---	---	.015	C61
		0.100kHz	---	---	.152	C60

Dev in ( ) are the M5 dev.

Date 5-8-68

ELECTRO-MECHANICAL RESEARCH, INC.

Sarasota, Florida

BPIF II

ord - Model 4140-05-M5
Assembly No. 6466 M5

NO. 6466 S/N _____

PROJECT _____

cedure AP-10406 Rev. _____

Date _____

POA _____

_____ Tested by _____ Reviewed by _____

The paragraph numbers in the test record correspond to the paragraph numbers in the test procedure.

at all equipments have calibration stickers and are within

ibration periods _____.

R49 _____ K ohms

by C Hobbs

by Eugene Weck

SETTING KHz	DEV.	NOM. LOW	NOM. HIGH	NOM. LOW	NOM. HIGH	picofarads Ca	picofarads Cb
010.0	7.5	20.4		9.56		C45	C41
		19.4	20.8	9.082	10.04		
01.00		20.2		1.05 ms			
		19.2	20.6	1.00 ms	1.10 ms		
0.100		19.4		10.6 ms			
		17.5	21.3	10.1 ms	11.1 ms		
0100.		18.2		95.6		C49	C48
		16.4	20.0	90.82	100.4		
0200.		18.3		191.2		C13	C12
		17.3	19.3	181.6	200.7		
0300.		19.0		286.8			
		17.1	21.9	272.4	301.1		
0400.		17.8		382.4		C15	C14
		16.0	19.6	363.2	401.5		
0800.		15.5		764.8		C17	C16
		14.0	17.0	726.5	803.0		
1.000M		17.0		956		C2	C1
		15.3	18.7	908.2	1004	R73	R72
0110.		18.7		105.16		C19	C18
		16.8	19.1	99.90	110.4		
0120.		18.1		114.72		C21	C20
		17.0	19.2	108.98	120.5		
0140.		17.9		133.84		C25	C24
		16.4	19.4	127.14	140.5		
0180.		17.3		170.5		C29	C28
		16.4	19.0	168.0	181.0		
0010.		15.5		9.56			
		14.5	16.5	9.082	10.04		
0011.		15.8		10.516			
		14.8	16.9	9.990	11.15		
0012.		16.1		11.472			
		15.1	17.1	10.89	12.17		
070.0		20.3		67.0			
		18.3	22.3	65.0	69.0		
0700.		17.4		670			
		15.7	19.1	650	690		

DIAL SETTING kHz	DEV.	PEAK GAIN db NOM. LOW	NOM.	HIGH	PEAK FREQUENCY kHz NOM. LOW	NOM.	HIGH	TUNING CAPACITORS picofarads Ca	Cb
0014.	7.5		16.6			13.384			
		15.0		18.2	12.71		14.20		
0018.			16.3			17.222			
		14.7		18.0	16.35		18.50		
0100.	15		12.0			88.4			
		10.8		13.2	83.98		92.8		
01.00			13.2			1.131 ms			
		12.8		13.6	1.077 ms		1.192 ms		
0.100			13.4			11.31 ms			
		13.0		14.0	10.77 ms		11.92 ms		
0100.	30.		5.3			77.20			
		4.7		5.9	73.60		80.80		
0100.	40(20)		9.6			84.5			
		8.6		10.6	81.0		89.0		
010.0	30		5.5			7.12			
		5.1		5.9	6.76		7.47		
010.0	40(20)		9.8			8.2			
		9.0		10.2	7.8		8.7		

Dev. in ( ) are the M5 dev.

FINAL TEST PROCEDURE

For

MODEL 4140-05-M5

BANDPASS INPUT FILTER

SECTION I
(6463-M5)

Prepared by C. Holderman Date 5/7/68

Approved by E. West Date 5/8/68

TEST EQUIPMENT

The following test equipment or equivalent is required to test the Bandpass Input Filter, Section I, Assembly.

1.1 HP-400L (2)

1.2 HP-651A or General Radio 1310-A

1.3 CMC Model 706C

1.4 RCA WV-98A

1.5 Capacitance Meter T-0448

1.6 Power Designs 4005

1.7 4140 Chassis

1.8 6463/6466 Adapter Card

1.9 Precise Decade Resistance 468

PRELIMINARY

2.1 In the event of difficulty in performing the electrical tests in Section 3, a troubleshooting guide is given in TABLE I. This guide is for the purpose of checking the operation of the relays on the card plus give an approximate indication of the values of the switchable components. The accuracy of the component variables are solely a function of the measuring instruments. The capacitance meter accuracy is ±5% full scale and the ohmmeter accuracy is 3 degrees of arc anyplace on the scale.

2.2 Connect the card being tested with an extender card into its proper location in the discriminator. The regulator card should also be installed in the discriminator.

2.3 Connect the ohmmeter and/or capacitance meter to the positions indicated in the LOCATION column of TABLE I.

2.4 Place the discriminator switches in the positions indicated in the DEV and FREQ. columns and observe the proper value of the component being measured.

ELECTRICAL TESTS

3.1 Connect the BPIF SEC 1 card with an extender into its proper location in the discriminator chassis. Connect the M5 INPUT card in its proper location in the discriminator chassis.

3.2 Temporarily connect the input VTVM to terminal E12 on the BPIF SEC 1 card. Connect the remainder of the test equipment as shown in Figure 1.

3.2.1 Adjust the signal generator for 1 kHz and 1V rms at E12.

3.2.2 Measure the amplifier gain on the OUTPUT VTVM at TP-1.

3.3 Connect a decade resistance box between terminals E1 and E2 and adjust the resistance to obtain 3V rms (gain = 3). Have the nearest 1% resistance value installed and recheck the gain of the amplifier. Record the resistance value of R49.

3.4 Check the peak gain and frequency at the dial settings of 010.0 kHz, 01.00 kHz and 0.100 kHz as follows:

3.4.1 Set the center frequency switch on the discriminator to the correct position per 3.4 above and the DEV. switch to the ±7.5% position. Connect the input VTVM to E5 on the BPIF I card.

3.4.2 Adjust the signal generator for 0 db on the 0.3V scale of the input VTVM and sweep the input frequency to obtain the peak output voltage at TP-1. The nominal peak gain and peak frequency is indicated in Table 2 of the test record. Check the appropriate boxes in TABLE 2.

3.5 Set the center frequency and deviation switches on the discriminator in the 100 kHz ±7.5% positions.

3.5.1 Adjust the input generator for 0 db on the .3V scale of the input VTVM at E5 and sweep the input frequency to obtain the peak output voltage. The nominal peak gain and peak frequency is indicated in TABLE 2.

3.5.2 Repeat 3.6.1 for the 200 kHz ±7.5% case. The capacitors indicated in the Ca and Cb columns should be selected to obtain the nominal value of peak gain and frequency. Check the appropriate boxes in TABLE 2 and record the capacitor values selected.

3.5.3 Repeat 3.6.1 for the 300 kHz ±7.5% case. If the peak gain and frequency is out of the allowable limits capacitors C5 and C6 should be selected to obtain the proper response.

3.5.3.1 Repeat steps 3.6, 3.6.1 and 3.6.3 until satisfactory results can be obtained. Record the final capacitance values installed and check the appropriate boxes in TABLE 2.

3.5.4 Measure and/or adjust the peak gain and peak frequency of the remaining positions in TABLE 2.

3.5.4.1 Check the appropriate boxes and record the capacitance values installed on the card to obtain satisfactory operation as determined by the limits in TABLE 2. On low frequency switch positions the frequency limits are expressed in time limits. Therefore, when time limits are given, the frequency counter should be set to measure period.

3.6 Connect the BPIF I card with an IFOUT card and a BPIF II to make a composite band pass filter. Check the bandedge attenuation (3 ±1 db) at each of the dial settings at 7.5%, 400 Hz, 1.3 kHz, 10 kHz, 10.5 kHz, 70 kHz, 93 kHz, 100 kHz, 110 kHz, 124 kHz, 165 kHz, 180 kHz, 200 kHz, 400 kHz, 700 kHz, 800 kHz and 1 mHz. Check the bandedge attenuation (3 ±1 db) at 100 kHz and deviations of 15%, 30% and 40% (actually 20% for M5). Readjust the BPIF I card if necessary.

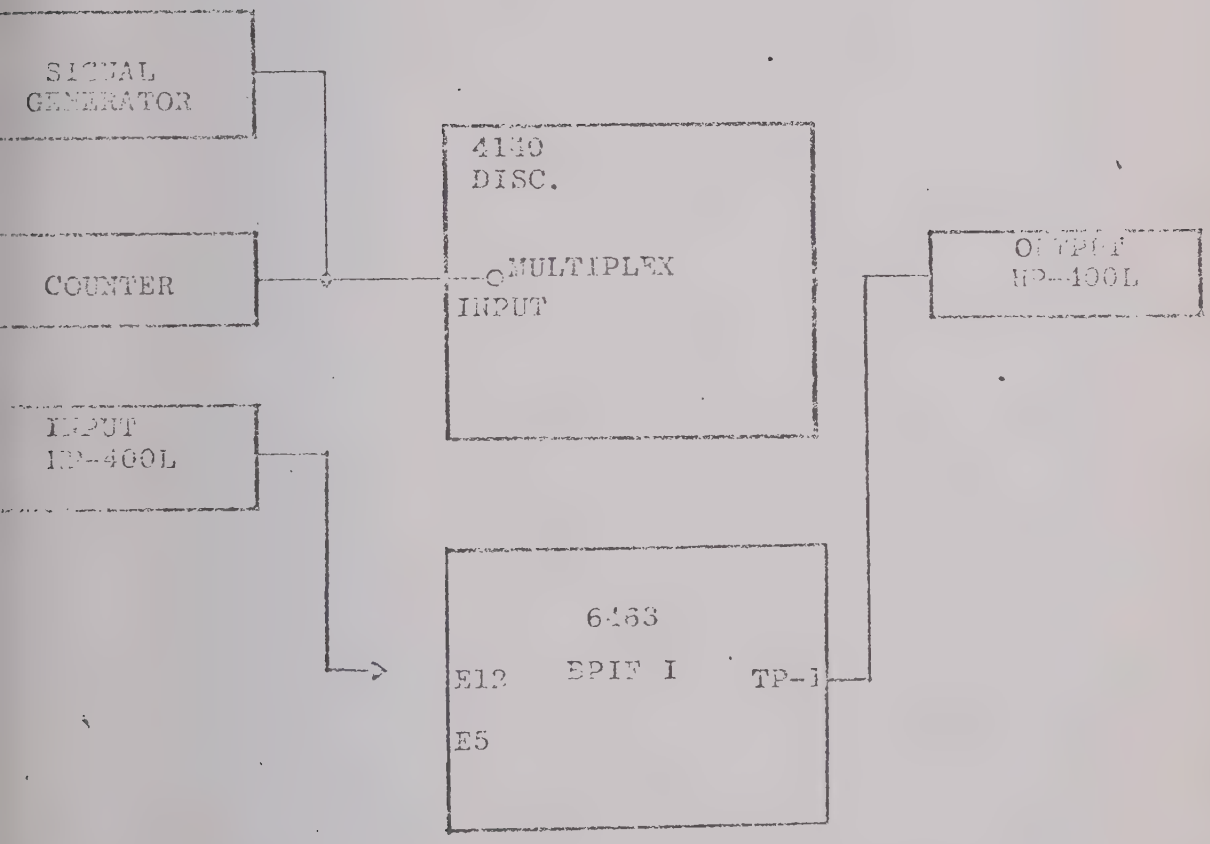
SIGNAL GENERATOR
COUNTER
INPUT IP-400L
4140 DISC.
MULTIPLEX INPUT
OUTPUT IP-400L
6463
E12
BPIF I
TP-1
E5

FIGURE I

TABLE I

[illegible]TION	SWITCHES DEV. %	FREQ.	MEASUREMENT R	R SYMBOL	C	C SYMBOL
[illegible]5	7.5	0000	4.99K	R68	—	—
	15	↓	3.40K	R67	—	—
	30		1.91K	R66	—	—
	40 (20)		2.87K	R65	—	—
[illegible]14	7.5	0000	—	—	56 pf	C42
	15		—	—	43 pf	C38
	30		—	—	16 pf	C32
	40 (20)		—	—	40 pf	C[illegible]
[illegible]9	7.5	0.100 kHz	2.49K	R18	—	—
	7.5	0100. kHz	2.49K	R19	15 pf	C8
[illegible]E[illegible]	7.5	020.0 kHz	—	—	.1380 pf	C[illegible]
	↓	0.200 kHz	—	—	.138	C60
		02.00 kHz	—	—	.0138	C61
		0200. kHz	—	—	147 pf	C47
	15		—	—	150 pf	C39
	30		—	—	160 pf	C34
	40 (20)		—	—	167 pf	C31
[illegible]E14	40 (20)	0200. kHz	—	—	40 pf	K14
[illegible]E4	40(20)	020.0 kHz	—	—	.1640 pf	C41
	↓	0.200 kHz	—	—	.180	C40
		02.00 kHz	—	—	.018	C44

Dev. in ( ) are the M5 dev.

TABLE 1

	SWITCHES		MEASUREMENT			
TION	DEV. %	FREQ.	R	R SYMBOL	C	C SYMBOL
-E13	7.5	0000	∞		0	
		1.000 MC	1 K	R3		C1
		0800. kHz	1.24 K	R32		C16
		0400. kHz	2.49 K	R28		C14
		0200. kHz	4.99 K	R16		C12
		0100. kHz	10 K	R11		C5
		0080. kHz	12.4 K	R45		C28
		0040. kHz	24.9 K	R41		C24
		0020. kHz	49.9 K	R36		C20
		0010. kHz	100 K	R34		C18
		0008. kHz	120 K	R63		C62
		0004. kHz	240 K	R61		C64
		0002. kHz	510 K	R59	---	---
		0001. kHz	1 M	R56	---	---
-E14	7.5	0000	∞		0	
		1.000 MC	1 K	R4		C2
		0800. kHz	1.24 K	R33		C17
		0400. kHz	2.49 K	R29		C15
		0200. kHz	4.99 K	R17		C13
		0100. kHz	10 K	R12		C6
		0080. kHz	12.4 K	R46		C29
		0040. kHz	24.9 K	R42		C25
		0020. kHz	49.9 K	R37		C21
		0010. kHz	100 K	R35		C19
		0008. kHz	120 K	R64		C63
		0004. kHz	240 K	R62		C65

	SWITCHES		MEASUREMENT			
ION	DEV. %	FREQ.	R	R SYMBOL	C	C SYMBOL
' Ω)	7.5	0002. kHz	510 K	R59	— —	— —
		0001. kHz	1 M	R57	— —	— —

Page 1 of

Date 5-8-68

ELECTRO-MECHANICAL RESEARCH, INC.

Sarasota, Florida

BPIF 1

ord - Model 4140-05-M5 NO. 6463 S.N

Assembly No. 6463 M5

PROJECT

cedure AP-10405 Rev.

POA

Date

Tested by Reviewed by

The paragraph numbers in the test record correspond to the paragraph numbers in the test procedure.

t all equipments have calibration stickers and are within

libration periods .

3 R49 K ohms

l by :

l by :

010.0	7.5	15.4	16.5	10.0	10.5	11.1	C42		C47	
01.00		13.9	15.5	1.0	1.05	1.11				
0.100		14.1	15.5	10.0 ms	9.625 ms	9.10ms				
0100.		12.6	15.5	100	105	111	C5		C6	
0200.		14.2	16.5	200	210	222	C12		C13	
0300.		12.6	18.2	300	315	333				
0400.		15.4	16.5	400	420	444	C14		C15	
0800.		13.9	16.5	800	840	888	C16		C17	
1.000		15.0	16.2	1000	1050	1110	C1		C2	
0110.		13.8	17.7	109.5	115.5	122.5	C18		C19	
0120.		15.6	17.8	120	126	135	C20		C21	
0140.		13.9	17.3	140	147	156	C24		C25	
0180.		14.7	17.9	180	189	199	C28		C29	
0010.		13.3	14.2	10.0	10.5	12.1				
0011.		14.5	15.1	10.95	11.55	13.4				
0012.		14.6	15.3	12.0	12.6	14.4				
0014.		14.3	16.1	14.0	14.7	17.2				
0018.		14.7	17.1	18.0	18.9	22.3				
070.0		10.6	16.5	69.5	73.5	77.0				
0700.		11.4	18.2	695	738	772				
		11.6								
		12.0								
		12.2								
		13.5								
		15.0								

KHz		LOW	HIGH	LOW	HIGH	C3	C5
0100.	15	11.4	12.6	107	113	C43	C46
01.00		10.5	11.6	1.05	1.11		
0.100		10.3	11.5	8.56 ms	9.00 ms		
0100.	30	9.0	10.4	123	129	C36	C37
0100.	40(20)	10.4	11.6	112	118	C33	C35
010.0	30	9.7	10.7	12.2	12.8		
010.0	40(20)	10.8	12.0	11.2	11.8		

			11.4	13.8	107	121	
			10.5	12.7	1.05	1.16	
			10.3	12.6	8.56 ms	9.90ms	
			9.0	11.4	123	138	
			10.4	12.8	112	127	
			9.7	11.7	12.2	13.4	
			10.8	13.2	11.2	12.4	

Dev. in ( ) are the M5 dev.

FINAL TEST PROCEDURE

For

MODEL 4140-05-M5

INPUT ASSEMBLY

(6472 M5)

Prepared by C. Holderman Date 5-8-68

C. Holderman

Approved by E. West Date 6/6/68

E. West

.0 TEST EQUIPMENT

The following test equipment or equivalent is required to test the Input Assembly.

1.1 HP-400L (2)

1.2 HP-651A or General Radio 1310-A

1.3 RCA WV-98A

1.4 Capacitance Meter T-0448

1.5 Power Designs 4005

1.6 4140 Chassis

1.7 6472 Adapter Card

.0 PRELIMINARY

2.1 In the event of difficulty in performing the electrical test in section 2, a troubleshooting guide is given in TABLE I. This guide is for the purpose of checking the operation of the relays on the card plus give an approximate indication of the values of the switchable components. The accuracy of the component variables are solely a function of the measuring instruments. The capacitance meter accuracy is ± 5% full scale and the ohmmeter accuracy is 3 degrees of arc any place on the scale.

2.2 Connect the card being tested with an extender card into its proper location in the discriminator. The regulator card should also be installed in the discriminator.

2.3 Connect the ohmmeter and/or capacitance meter to the positions indicated in the LOCATION column of TABLE I.

2.4 Place the discriminator switches in the positions indicated in the DEV and FREQ. columns and observe the proper value of the component being measured.

.0 ELECTRICAL TESTS

3.1 Connect an extender card and the 6472 Adapter card into position J2 of the chassis. Connect the input card into the 6472 Adapter card.

3.2 Connect the test equipment as shown in Figure 1. Adjust the input frequency for 1 kHz as indicated by the oscillator dial reading. Adjust the amplitude of the oscillator for 1V rms as indicated on the input VTVM.

3.3 Maintain the input level constant at 1V rms and observe the output voltages present for the various switch positions indicated in TABLE 2 of Test Record. Check the appropriate box for each condition.

3.3.1 A switch position was included on the VTVM switch to facilitate checking the tracking of the two VTVM's. The purpose of using two VTVM's is to reduce the number of switch movements with each measurement.

3.4 Set the input oscillator for 700MV rms input at 100 kHz as indicated by the oscillator dial. Observe the Input Meter on the front panel, the meter should indicate between .47 and .53V rms. Check on the test record.

3.5 Set the low pass switches for 300 kHz and observe the Out of Range lamp. The lamp should be extinguished. Check on the test record.

3.5.1 Vary the low pass switches from 400 kHz to 900 kHz. The lamp should be on in all positions. Check on the test record.

3.5.2 Return the low pass switches to 300 kHz.

3.6 Set the bandpass switches to 1.7 MHz and observe the Out of Range lamp. The lamp should be extinguished. Check on the test record.

3.6.1 Vary the bandpass switches from 1.8 MHz to 1.9 MHz. The lamp should be on in both positions. Check on the test record.

3.6.2 Return the bandpass switches to 100 kHz.

3.7 Measure continuity between E10, TP1 and Pin 11, all on the card. Check on the test record.

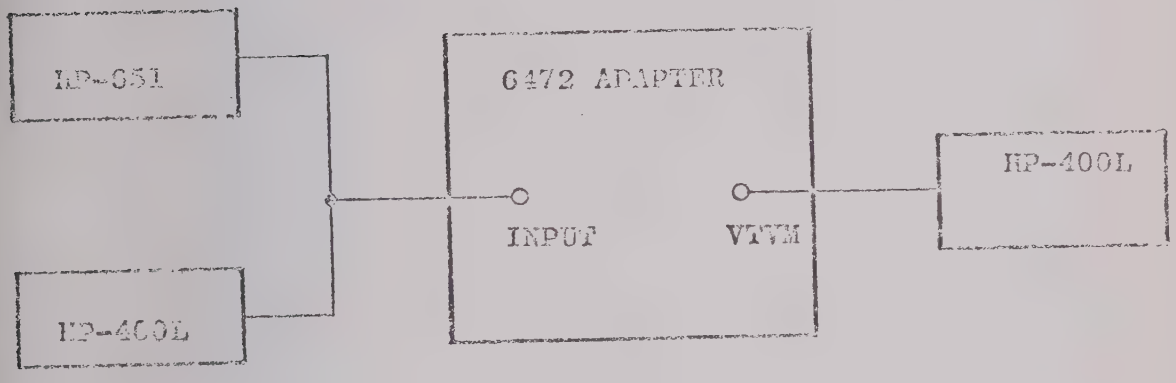

FIGURE 1

6472 ADAPTER CARD

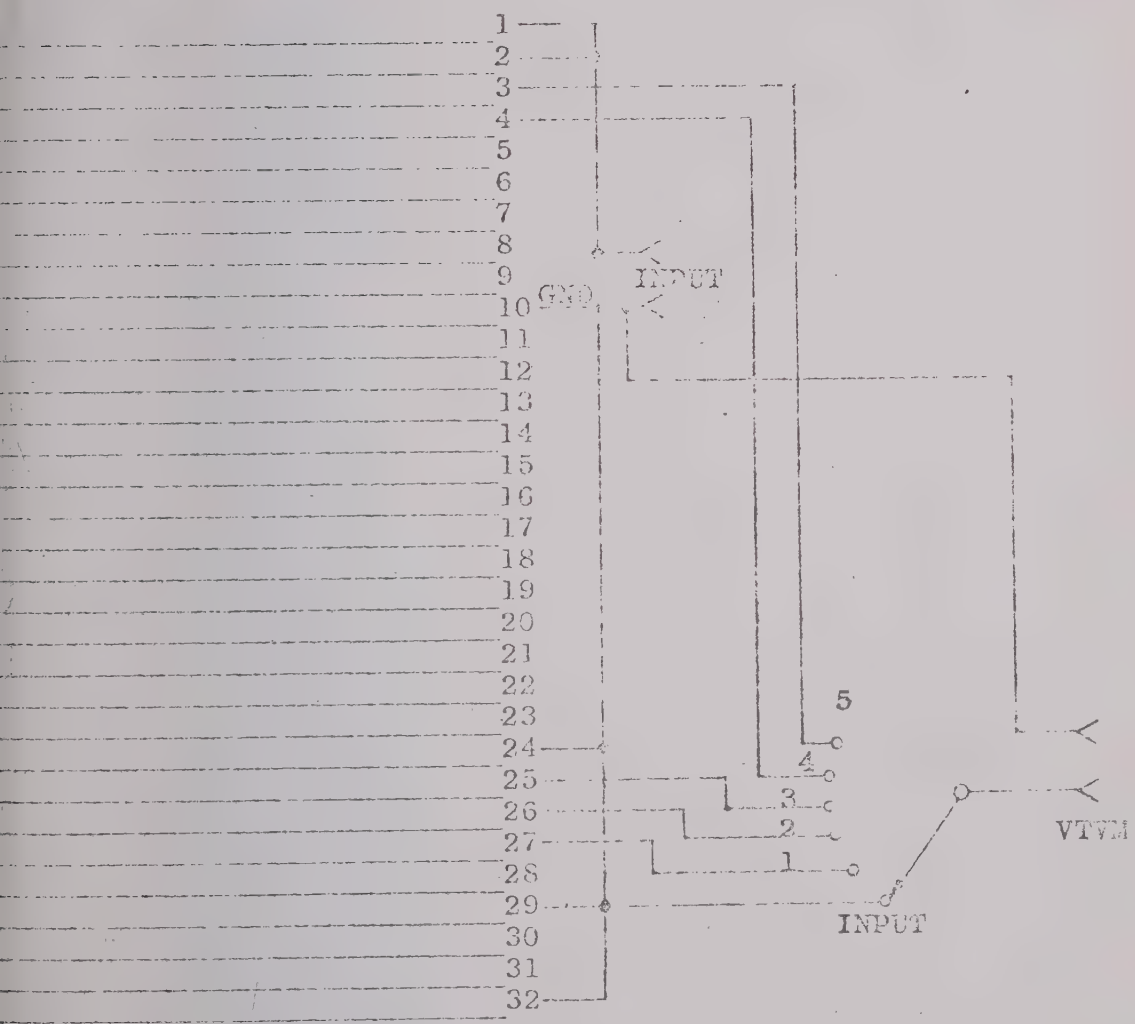

INPUT CARD

AP-10404
Rev. ___

TABLE I
ASSEMBLY NO. 6472 M5

SWITCHES		MEASUREMENT			
DEV.	FREQ.	R	R SYMBOL	C	C SYMBOL
7.5	0000	1.54K	R2		
15		2.21K	R4		
30		2.87K	R1		
40 (20)		2.87 K	R3		
7.5	0000	665	R75		
15		1.78K	R77		
30		15K	R76		
40 (20)		2.61K	R78		
7.5	0000	243	R11		
15		576	R13		
30		1.69K	R10		
40 (20)		806	R12		
7.5	0000	1.24K	R81		
15		909	R83		
30		562	R82		
40 (20)		787	R84		

Dev. in ( ) are the M5 dev.

Date 5-8-68

ELECTRO-MECHANICAL RESEARCH, INC.

Sarasota, Florida

INPUT

ord - Model 4140-05-M5
Assembly No. 6472 M5

NO. 6472 S/N _____

PROJECT _____

edure AP-10404 Rev. _____

Date _____

POA _____

_____ Tested by _____ Reviewed by _____

he paragraph numbers in the test record correspond to the aragraph numbers in the test procedure.

t all equipments have calibration stickers and are within

libration periods _____.

.4 Input Meter Circuit
(.47V rms - .53V rms) _____ (Check)

.5 Out of Range - Low Pass
300 kHz - lamp off _____ (Check)

.5.1 400 kHz - 900 kHz - lamp on _____ (Check)

.6 Out of Range - Band Pass
1.7 MHz - lamp off _____ (Check)

1.8 MHz - 1.9 MHz - lamp on _____ (Check)

7 Continuity _____ (Check)

by _____

by _____

INPUT CARD
TABLE 2
ASSEMBLY NO. 6472 M5

NG	DEV. %	VTVM Sw		VOLTAGE OUT
Hz	7.5	3		84.5 mv - 93.5 mv
	15			178 mv - 197 mv
	30			383 mv - 424 mv
	(20) 40			232 mv - 257 mv
	7.5	4		316 mv - 350 mv
	15			253 mv - 280 mv
	30			174 mv - 193 mv
	(20) 40			228 mv - 252 mv
	7.5	2		224 mv - 248 mv
	15			291 mv - 322 mv
	30			346 mv - 383 mv
	(20) 40			346 mv - 383 mv
	7.5	5		111 mv - 123 mv
	15			249 mv - 276 mv
	30			712 mv - 787 mv
	(20) 40			326 mv - 360 mv

Dev. in ( ) are the M5 dev.

Do not remove from Library